EKSPLUATĀCIJAS ĪPAŠĪBU DEKLARĀCIJA

Dop Nr. KEW - 1109-CPD-1010-1 **- lv**

1. Produkta tipa unikālais identifikācijas kods: ThermoScrew TS U8 Gecko

2. Tipa, partijas vai sērijas numurs vai jebkurš cits elements, kas ļauj identificēt būvizstrādājumu, kā to pieprasa 11(4) pants:

   ETA-16/0100 pielikums A3
   Partijas numurs: skatīt uz iepakojuma

3. Būvizstrādājuma paredzētais pielietojums saskaņā ar piemērojamo harmonizēto tehnisko specifikāciju, kā to paredzējis ražotājs:

vispārējs tips	Ieskrūvējams plastmasas enkurs ārējās siltumizolācijas kompozīta sistēmu ar apmetumu stiprināšanai
paredzēts lietošanai	ETA-16/0100 pielikums B1
iespēja / kategorija	ETA-16/0100 pielikums B1
ielādēšana	ETA-16/0100 pielikums B1
materiāls	ETA-16/0100 pielikums A4
temperatūras diapazons	ETA-16/0100 pielikums B1

4. Nosaukums, reģistrētais nosaukums vai reģistrētas tirdzniecības zīmes nosaukums un ražotāja kontaktadrese, kā to pieprasa 11(5). pants.

   KEW Kunststofferzeugnisse GmbH Wilthen
   Dresdener Straße 19
   02681 Wilthen
   Vācija

5. Ja piemēro, autorizētā pārstāvja, kas ir pilnvarots veikt 12(2) pantā norādītos uzdevumus, nosaukums un kontaktadrese:

   --

6. Būvizstrādājuma īpašību nemainīguma novērtēšanas un verifikācijas sistēma vai sistēmas, kā norādīts V pielikumā:

   Sistēma 2+

7. Ekspluatācijas īpašību deklarācijas attiecībā uz būvizstrādājumu, uz ko attiecas harmonizētais standarts, gadījumā:

   --

8. Ekspluatācijas īpašību deklarācijas, kas attiecas uz būvizstrādājumu, kam izsniegts Eiropas tehniskais novērtējums, gadījumā:

yra išduota: DIBt Deutsches Institut für Bautechnik

kokiu pagrindu: ETA-16/0100 uz 05.04.2016

pamatojoties uz: ETAG 014, 2011. gada februāra versija

1109-CPD izpildīja Sistēma 2+

i) sākotnējā ražotnes apskate un ražošanas procesa kontrole
ii) nepārtraukta ražošanas procesa kontroles uzraudzība, novērtēšana un apstiprināšana

Paziņotā iestāde 1109-CPD-1010-1

9. Deklarētās īpašības:

Būtiskie raksturlielumi	Projektēšanas metode	Ekspluatācijas īpašības Elektrolītiski cinkots tērauds	Harmonizētā tehniskā specifikācija
Raksturīgā noturība	ETAG 014	ETA-16/0100 pielikums C1	ETAG 014
Minimālais šķautnes attālums un enkuru savstarpējais attālums	ETAG 014	ETA-16/0100 pielikums B2	
Nobīdes īpašības	ETAG 014	ETA-16/0100 pielikums C2	

Ja izmanto 37. vai 38. pantā norādīto speciālo tehnisko dokumentāciju – prasības, kurām atbilst produkts: --

10. Produkta, kas identificēts 1. un 2. punktā, īpašības atbilst 9. punktā deklarētajām īpašībām.

Šī ekspluatācijas īpašības deklarācija ir izdota ar pilnu ražotāja, kas identificēts 4. punktā, atbildību.

Ražotāja vārdā parakstīja:

André Gedan
(generalinis pardavimų ir rinkodaros direktorius)
Wilthen, 20.04.2018

Screw plate ThermoScrew TS U8 Gecko

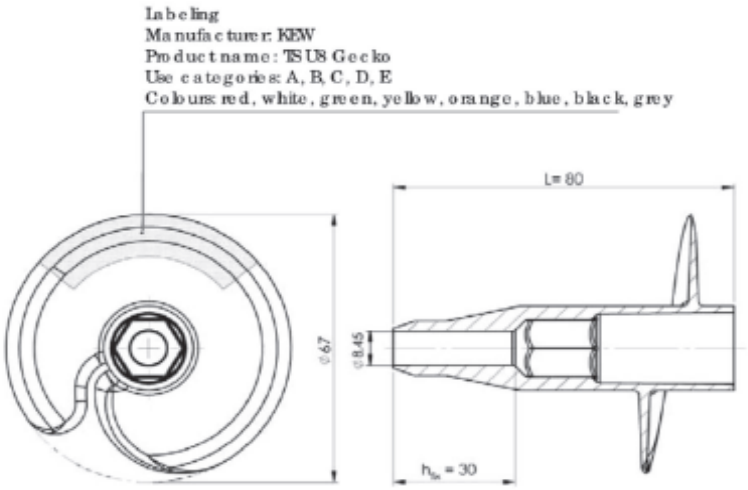

Anchor sleeve TSBD WSG with special screw (ETA-08/0314)

Anchor sleeve TSBD WSG

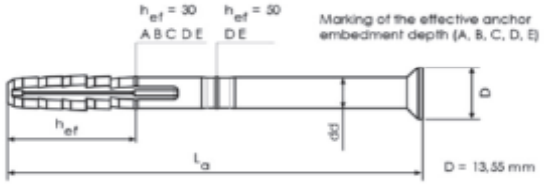

Special screw

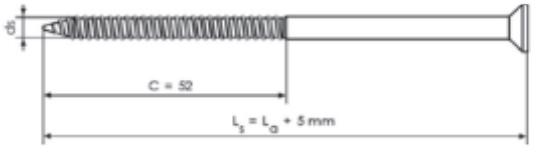

Insulation plug

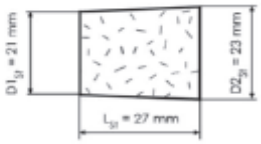

ThermoScrew TS U8 Gecko	**Annex A 3**
Product description Screw plate, anchor sleeve, special screw, insulation plug Marking	

Table A1: Dimensions

Anchor type	Anchor sleeve			Special screw		
	d_d [mm]	L_a [mm]	h_{ef} [mm]	d_s [mm]	c [mm]	L_s [mm]
TSBD WSG Use category (A-B-C-D-E)	8	100 - 250	30	5,5	52	L_a + 5mm
TSBD WSG Use category (D-E)	8	100 - 250	50	5,5	52	L_a + 5mm

Anchor type	Screw plate		
	d [mm]	L [mm]	h_{fix} [mm]
ThermoScrew TS U8 Gecko Use category (A-B-C-D-E)	67	80	30

Table A2: Materials

Element	Material
Screw plate	polyamide PA 6.6, colour: red, white, green, yellow, orange, blue, black, grey
Anchor sleeve	polypropylene PP, colour: papyrus white
Special screw	galvanized steel. A2L or A2K according to EN ISO 4042:2001
Insulation plug	polystyrene

Setting and screwing tool TS SW

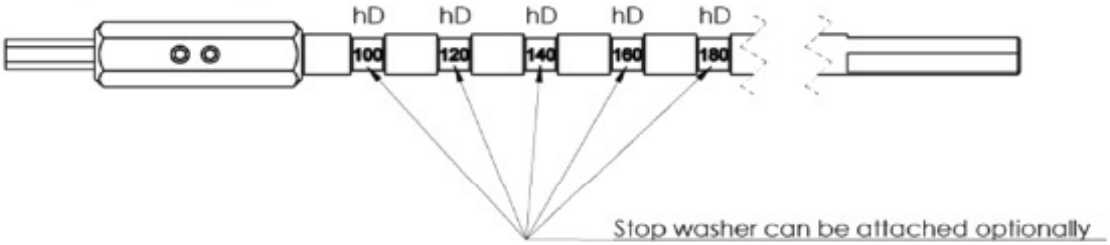

Stop washer

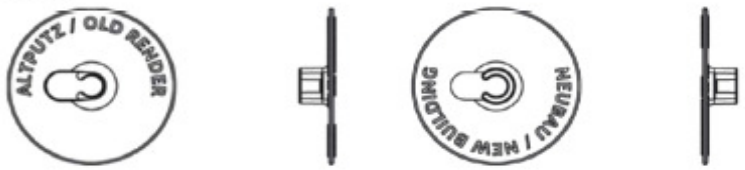

Front Back

ThermoScrew TS U8 Gecko	Annex A 4
Product description Dimensions, materials, setting tool	

Specifications of intended use

Anchorages subject to:

- The anchor may only be used for transmission of wind suction loads and shall not be used for the transmission of dead loads of the thermal insulation composite system.

Base materials:

- Normal weight concrete (use category A) according to Annex C 1
- Solid masonry (use category B), according to Annex C 1 and C 3
- Hollow or perforated masonry (use category C), according to Annex C 1 and C 3
- Lightweight aggregate concrete (use category D), according to Annex C 1
- Autoclaved aerated concrete (use category E), according to Annex C 1
- For other base materials of the use categories A, B, C, D or E the characteristic resistance of the anchor may be determined by job site tests according to ETAG 014 Edition February 2011, Annex D.

Temperature Range:

- 0°C to +40°C (max. short term temperature +40°C and max. long term temperature +24°C)

Design:

- The anchorages are designed in accordance with the ETAG 014 Edition February 2011 under the responsibility of an engineer experienced in anchorages and masonry work.
- Verifiable calculation notes and drawings are prepared taking account of the loads to be anchored. The position of the anchor is indicated on the design drawings.
- Fasteners are only to be used for multiple fixings of thermal insulation composite systems.

Installation:

- Hole drilling by the drill modes according to Annex C 1.
- Anchor installation carried out by appropriately qualified personnel and under the supervision of the person responsible for technical matters of the site.
- Installation temperature from 0°C to +40°C
- Exposure to UV due to solar radiation of the anchor not protected by rendering ≤ 6 weeks

ThermoScrew TS U8 Gecko	**Annex B 1**
Intended use Specifications	

Table B1: Installation parameters for OLD RENDER

Anchor type			TSBD WSG
Use catagories			A-B-C-D-E
Drill hole diameter	d_0 =	[mm]	8
Cutting diameter of drill bit	$d_{cut} \leq$	[mm]	8,45
Effective anchor embedment depth	h_{ef} =	[mm]	30
Thickness of equalizing layer	$t_{tol} \leq$	[mm]	40 – 190
Position of screw plate	$t_{fix} \leq$	[mm]	30
Depth of drilled hole to deepest point [1)]	$h_1 \geq$	[mm]	80 – 230
Required length of anchor [2)]	L_a =	[mm]	100 – 250
Thickness of insulation material	h_D =	[mm]	100 – 400
Total borehole depth	h_b =	[mm]	$h_D + h_1$

Table B2: Installation parameters for NEW BUILDING

Anchor type			TSBD WSG	
Use catagories			A-B-C-D-E	D-E
Drill hole diameter	d_0 =	[mm]	8	8
Cutting diameter of drill bit	$d_{cut} \leq$	[mm]	8,45	8,45
Effective anchorage depth	h_{ef} =	[mm]	30	50
Thickness of equalizing layer	$t_{tol} \leq$	[mm]	20	
Position of screw plate	$t_{fix} \leq$	[mm]	50	30
Depth of drilled hole to deepest point [1)]	$h_1 \geq$	[mm]	60	80
Required length of anchor [2)]	L_a =	[mm]	100	
Thickness of insulation material	h_D =	[mm]	100 – 400	
Total borehole depth	h_b =	[mm]	$h_D + h_1$	

[1)] $h_1 = h_{ef} + t_{tol} + 10$ mm
[2)] $L_a = h_{ef} + t_{tol} + t_{fix}$

Table B3: Scheme of distances and spacing

			TSBD WSG
Minimum thickness of the base material	h ≥	[mm]	100
Minimum allowable spacing	s_{min} =	[mm]	100
Minimum allowable edge distance	c_{min} =	[mm]	100

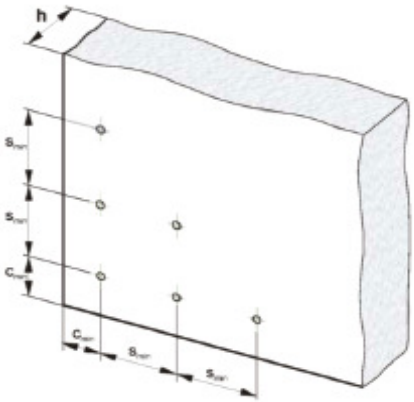

ThermoScrew TS U8 Gecko

Intended use
Installation parameters
Distance and dimensions of the base material

Annex B 2

Table C1: Characteristic resistance to tension loads N_{Rk} in [kN] for each single anchor

Base material	Bulk density class ρ [kg/dm³]	Minimum compressive strength f_b [N/mm²]	Remarks	Drill method	N_{Rk} [kN]
Concrete C12/15 EN 206-1:2000				Hammer drilling	**1,5**
Concrete C16/20 – C50/60 EN 206-1:2000					**1,5**
Sand-lime solid bricks, KS e.g. acc. to DIN V 106:2005-10 / EN 771-2:2011	≥1.8	12	Vertically perforation up to 15 %		**1,5**
Clay bricks, Mz e.g. acc. to DIN V 105-100:2012-01 / EN 771-1:2011	≥1.7	12	Vertically perforation up to 15 %		**1,5**
Lightweight concrete solid blocks, Vbl 2 e.g. acc. to DIN V 18152-100:2005-10 / EN 771-3:2011	≥0.8	2	According to Annex C 3		**0,75**
Lightweight concrete solid blocks, Vbl 4 e.g. acc. to DIN V 18152-100:2005-10 / EN 771-3:2011	≥0.8	4	According to Annex C 3		**1,2**
Vertically perforated clay bricks, HLz e.g. acc. to DIN 105-100:2012-01 / EN 771-1:2011 outer web thickness ≥ 12 mm	≥1.0	12	Vertically perforation more than 15 % and less than 50 %	Rotary drilling	**0,9**
Vertically perforated sand-lime bricks, KSL e.g. acc. to DIN V 106:2005-10 / EN 771-2:2011 outer web thickness ≥ 20 mm	≥1.4	12	Vertically perforation more than 15 % and less than 50 %		**1,5**
Lightweight concrete hollow blocks, 4K Hbl e.g. acc. to DIN V 18151-100:2005-10 / EN 771-3:2011	≥0.9	2	According to Annex C 3		**0,75**
Lightweight concrete hollow blocks, 1K Hbl e.g. acc. to DIN V 18151-100:2005-10 / EN 771-3:2011	≥0.8	2	According to Annex C 3		**0,9**
Vertically perforated clay bricks Hlz 250x380x235	≥1.0	6	According to Annex C 3		**0,5**
Lightweight aggregate concrete, LAC 4 e.g. acc. to EN 1520:2011-06 / EN 771-3:2011	≥1.0	4	h_{ef} ≥ 30 mm	Hammer drilling	**0,4**
			h_{ef} ≥ 50 mm		**0,9**
Lightweight aggregate concrete , LAC 6 e.g. acc. to EN 1520:2011-06 / EN 771-3:2011	≥1.0	6	h_{ef} ≥ 30 mm		**0,5**
			h_{ef} ≥ 50mm		**1,2**
Autoclaved aerated concrete, PP4-05 e.g. acc. to DIN V 4165-100:2005-10 / EN 771-4:2011	≥0.5	4	h_{ef} ≥ 30mm	Rotary drilling	**0,3**
			h_{ef} ≥ 50mm		**0,75**

ThermoScrew TS U8 Gecko	**Annex C 1**
Performances Characteristic resistance of the anchor	

Table C2: Displacements

Base material	Bulk density class ρ [kg/dm³]	Minimum compressive strength f_b [N/mm²]	Tension load N [kN]	Displacements $\delta_m(N)$ [mm]
Concrete C12/15-C50/60 EN 206-1:2000			0,50	1,6
Sand-lime solid bricks, KS DIN V 106:2005-10 / EN 771-2:2011	≥1.8	12	0,50	1,7
Clay bricks, Mz DIN 105-100:2012-01 / EN 771-1:2011	≥1.7	12	0,50	1,7
Lightweight concrete blocks, Vbl 2 DIN V 18152-100:2005-10 / EN 771-3:2011	≥0.8	2	0,25	1,0
Lightweight concrete block, Vbl 4 DIN V 18152-100:2005-10 / EN 771-3:2011	≥0.8	4	0,40	1,5
Vertically perforated clay brick, HLz DIN 105-100:2012-01 / EN 771-1:2011	≥1.0	12	0,30	1,0
Vertically perforated sand-lime bricks, KSL DIN V 106:2005-10 / EN 771-2:2011	≥1.4	12	0,50	1,7
Lightweight concrete hollow block, 4K Hbl DIN V 18151-100:2005-10 / EN 771-3:2011	≥0.9	2	0,25	0,8
Lightweight concrete hollow block, 1K Hbl DIN V 18151-100:2005-10 / EN 771-3:2011	≥0.8	2	0,30	1,1
Vertically perforated clay bricks Hlz 250x380x235	≥1.0	6	0,15	0,6
Lightweight aggregate concrete, LAC 4 EN 1520:2011-06 / EN 771-3:2011	≥1.0	4	h_{ef} > 30 mm: 0,15	0,5
			h_{ef} ≥ 50 mm: 0,30	1,1
Lightweight aggregate concrete, LAC 6 EN 1520:2011-06 / EN 771-3:2011	≥1.0	6	h_{ef} > 30 mm: 0,15	0,5
			h_{ef} ≥ 50 mm: 0,40	1,3
Autoclaved aerated concrete, PP4-05 DIN V 4165-100:2005-10 / EN 771-4:2011	≥0.5	4	h_{ef} > 30 mm: 0,10	0,5
			h_{ef} ≥ 50 mm: 0,25	0,7

ThermoScrew TS U8 Gecko

Performances
Displacements

Annex C 2