TOIMIVUSDEKLARATSIOON

DoP Nr. KEW - 1109-CPR-2004 **- ee**

1. Tootetüübi ainulaadne identifitseerimiskood: Naelutatav TSDL-V / TSD-V WS

2. Tüübi-. Partii- või seerianumber või mõni muu element, mis ehitustoote võimaldab identifitseerimist vastavalt artiklile 11(4):

   ETA-12/0148 Lisa A2/A3
   Partiinumber: vt pakendilt

3. Ehitustoote ettenähtud kasutus või kasutused vastavalt rakendatavadel ühtlustatud tehnilisele spetsifikatsioonile, nagu on tootja poolt ettenähtud:

üldine tüüp	Naelutatav plastikankur väliste soojusisolatsiooni viimistlusega komposiitsüsteemide kinnitamiseks
kasutamiseks	ETA-12/0148 Lisa B1
Valik / kategooria	ETA-12/0148 Lisa B1
koormus	ETA-12/0148 Lisa B1
materjal	ETA-12/0148 Lisa A4
temperatuurivahemik	ETA-12/0148 Lisa B1

4. Nimi, registreeritud kaubanduslik nimi või registreeritud kaubamärk ja tootja kontaktaadress vastavalt artiklile 11(5):

   KEW Kunststofferzeugnisse GmbH Wilthen
   Dresdener Straße 19
   02681 Wilthen
   Saksamaa

5. Kui on rakendatav, siis volitatud esindaja, kelle volitus on kaetud artiklis 12(2) näidatud ülesannetega, nimi ja kontaktaadress:

   --

6. Ehitustoote toimimiskindluse hindamise ja kinnitamise süsteem või süsteemid, nagu on määratud Lisas V:

   System 2+

7. Juhul, kui ehitustoodet puudutav toimivusdeklaratsioon on kaetud ühtlustatud standardiga:

   --

8. Ehitustoodet puudutav toimivusdeklaratsioon korral, millele on Euroopa tehniline hinnang::

väljastatud: DIBt Deutsches Institut für Bautechnik

ETA-12/0148 alates 22.03.2017

väljastamise alusel: EAD 330335-00-0604

Näidatakse läbiviinud teavitatud asutus 1109-CPR on pärast System 2+

i) algne tehase ja tehase tootmise ülevaatus
ii) tehase tootmiskontrolli pidev järelvalve, hinnang ja kinnitus.

Ja järgnev: 1109-CPR-2004

9. Deklareeritud toimivus:

Esmatähtsad omadused	Konstruktsiooni meetod	Konstruktsiooni meetod		Ühtlustatud tehniline määratlus
		Teras, elektro-galvaniseeritud	Roostevaba teras	
Iseloomulik takistus	EAD 330335-00-0604	ETA-12/0148 Lisa C1	ETA-12/0148 Lisa C1	EAD 330335-00-0604
Minimaalne servakaugus ja ankru vahekaugus	EAD 330335-00-0604	ETA-12/0148 Lisa B2	ETA-12/0148 Lisa B2	
Omadused teisaldamisel	EAD 330335-00-0604	ETA-12/0148 Lisa C2	ETA-12/0148 Lisa C2	
Punkti soojusläbivus vastavalt	EAD 330335-00-0604	ETA-12/0148 Lisa C2	ETA-12/0148 Lisa C2	
Plaadi jäikus vastavalt	EAD 330335-00-0604	ETA-12/0148 Lisa C2	ETA-12/0148 Lisa C2	

Artikli 37 või 38 kasutamisele spetsiifilises tehnilises dokumentatsioonis, nõuded, millele toode vastab:

--

10. Toote toimuvus , mis on näidatud punktides 1 ja 2, on vastav punktis 9 deklareeritud toimele.

See toimivusdeklaratsioon on antud välja punktis 4 määratletud tootja ainuvastutusel.

Allkirjastanud tootja eest ja nimel:

André Gedan
(Müügi ja marketingi tegevdirektor)
Wilthen, 20.04.2018

TSDL-V

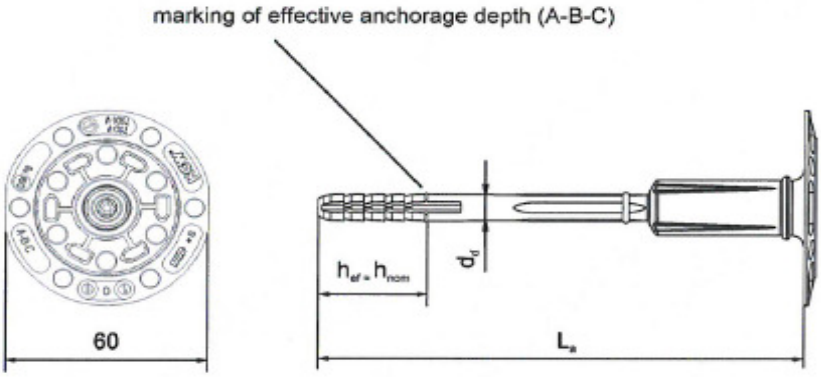

Marking

Company logo – (KEW®)
Anchor type – (TSDL-V)
Diameter of drill hole – (ø8)
Length of anchor – (e.g. 160)

Special nail with special head

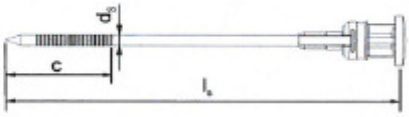

Table A1: Dimensions TSDL-V

Anchor type	Anchor sleeve				Special nail		
	L_a min [mm]	L_a max [mm]	d_d [mm]	h_{ef} [mm]	d_s [mm]	c [mm]	l_s [mm]
KEW - TSDL-V	**120**	**300**	**8**	**30**	**4,0**	**35**	**L_a + 4mm**
Determination of max. Thinkness of insulation [mm]: $h_{Dmax} = L_a - h_{ef} - t_{tol}$							
e.g.: TSDL-V 8x160	**L_a= 160**		**h_{ef}= 30**		**t_{tol}= 10**		
	thickness of insulation material **$h_{D\,max.}$ = 120**						

Insulation support – metal nail KEW TSDL-V and KEW TSD-V WS

Product description
Marking and dimensions of the anchor sleeve TSDL-V
spreading element / special nail

Annex A 2

TSD-V WS

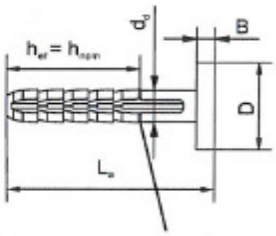

B ≥ 2,5mm
D ≥ 16mm

marking of effective anchorage depth

Special nail

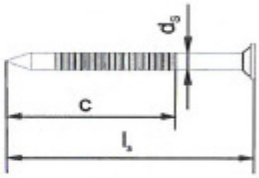

Table A2: Dimensions TSD-V WS

Anchor type	Anchor sleeve				Special nail		
	L_a min [mm]	L_a max [mm]	d_d [mm]	h_{ef} [mm]	d_s [mm]	c [mm]	l_s [mm]
KEW - TSD-V WS	**50**	**250**	**8**	**30**	**4,0**	**35**	**L_a + 4mm**

Insulation support – metal nail KEW TSDL-V and KEW TSD-V WS	**Annex A 3**
Produktbeschreibung Marking and dimensions of the anchor sleeve TSD-V WS spreading element / special nail	

Table A3: Materials

Member	Material
Anchor sleeve	Polypropylen, colour: papyrus white
Special nail	Steel, galvanized A2L or A2K according to EN ISO 4042:2001
	Stainless steel; mat.No. 1.4401, 1.4571 according to EN ISO 3506:2010

Table A4: Insulation discs, diameters and material

DSB 90

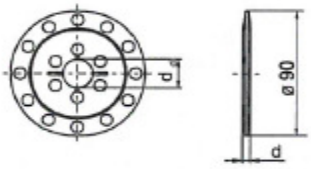

DSB 110

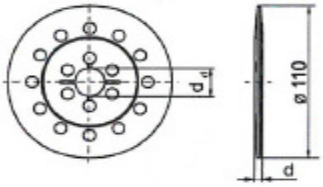

DSB 140

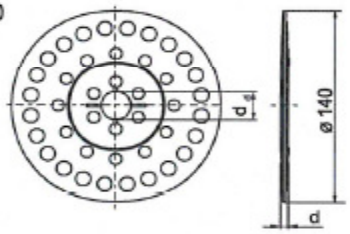

Insulation discs	Ø D [mm]	Ø d_d [mm]	d [mm]	Material
DSB 90	90	20	5	PA 6, PP
DSB 110	110	20	5	PA 6, PP
DSB 140	140	20	5	PA 6, PP

Insulation support – metal nail KEW TSDL-V and KEW TSD-V WS	**Annex A 4**
Product description Materials Additional plates in combination with KEW TSDL-V	

Specifications of intended use

Anchorages subject to:

- The anchor may only be used for transmission of wind suction loads and shall not be used for the transmission of dead loads of the thermal insulation composite system.

Base materials:

- Normal weight concrete (use category A) according to Annex C1.
- Solid masonry (use category B), according to Annex C1.
- Hollow or perforated masonry (use category C), according to Annex C1.
- For other base materials of the use categories A, B or C the characteristic resistance of the anchor may be determined by job site tests according to EOTA Technical Report TR 051 edition December 2016.

Temperature Range:

- 0°C to +40°C (max. short term temperature +40°C and max. long term temperature +24°C)

Design:

- The anchorages are designed in accordance with the EAD 330335-00-0604 under the responsibility of an engineer experienced in anchorages and masonry work.
- Verifiable calculation notes and drawings are prepared taking account of the loads to be anchored. The position of the anchor is indicated on the design drawings.
- Fasteners are only to be used for multiple fixings of thermal insulation composite systems.

Installation:

- Hole drilling by the drill modes according to Annex C1.
- Anchor installation carried out by appropriately qualified personnel and under the supervision of the person responsible for technical matters of the site.
- Installation temperature from 0°C to +40°C
- Exposure to UV due to solar radiation of the anchor not protected by rendering ≤ 6 weeks

Insulation support – metal nail KEW TSDL-V and KEW TSD-V WS	**Annex B 1**
Intended use Specifications	

Table B1: Installation parameters

Anchor type			KEW- TSDL-V
Drill hole diameter	$d_0 =$	[mm]	8
Cutting diameter of drill bit	$d_{cut} \leq$	[mm]	8,45
Depth of drilled hole to deepest point	$h_1 \geq$	[mm]	40
Effective anchorage depth	$h_{ef} =$	[mm]	30

Table B2: Anchor distances and dimensions of members

			KEW- TSDL-V
Thickness of member	$h \geq$	[mm]	100
Minimum allowable spacing	$s_{min} =$	[mm]	100
Minimum allowable edge distance	$c_{min} =$	[mm]	100

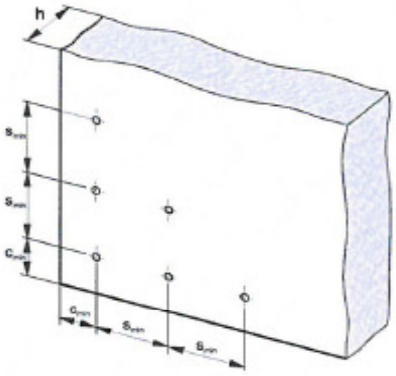

Insulation support – metal nail KEW TSDL-V and KEW TSD-V WS	**Annex B 2**
Intended use Installation parameters, Anchor distances and dimensions of members	

Table C1: Characteristic resistance N_{Rk} in concrete and masonry for a single anchor in kN

Base material	Bulk density ρ [kg/dm³]	Minimum Com-pressive strength f_b [N/mm²]	Remarks	Drill method	N_{Rk} [kN]
Concrete C12/15			EN 206-1:2000	Hammer drilling	1,2
Concrete C16/20 – C50/60			EN 206-1:2000	Hammer drilling	1,5
Sand-lime solid bricks, KS e.g. acc. to EN 771-2:2011	≥1.8	12	Vertically perforation up to 15%	Hammer drilling	1,5
Clay bricks, Mz e.g. acc. to EN 771-1:2011	≥1.7	20	Vertically perforation up to 15%	Hammer drilling	1,5
Vertically perforated clay bricks, HLz e.g. acc. to EN 771-1:2011	≥1.0	12	Vertically perforation more than 15% and less than 50% outer web thickness ≥ 12mm	Rotary drilling	0,9
Vertically perforated sand-lime bricks KS L, e.g. acc. to EN 771-2:2011	≥1.4	12	Vertically perforation more than 15% outer web thickness ≥ 22mm	Rotary drilling	1,2
Lightweight concrete hollow blocks, Hbl e.g. acc. to EN 771-3:2011	≥0.8	2	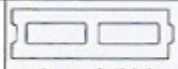 outer web thickness ≥ 50mm	Rotary drilling	0,6
Vertically perforated clay bricks, HLz e.g. acc. to EN 771-1:2011	≥0.9	12	outer web thickness ≥ 10mm	Rotary drilling	0,75
Lightweight concrete solid blocks, Vbl e.g. acc. to EN 771-3:2011	≥0.8	2	outer web thickness ≥ 43mm	Hammer drilling	0,6

Insulation support – metal nail KEW TSDL-V and KEW TSD-V WS	**Annex C 1**
Performances Characteristic resistance of the anchor in concrete and masonry	

Table C2: Displacements

Base material	Bulk-density-class ρ [kg/dm³]	Minimum compressive strength f_b [N/mm²]	Tension load N [kN]	Displacements $\delta_m(N)$ [mm]
Concrete C12/15 EN 206-1:2000			0,4	0,2
Concrete C16/20 – C50/60 EN 206-1:2000			0,5	0,2
Sand-lime solid bricks, KS e.g. acc. to EN 771-2:2011	≥1.8	12	0,5	0,3
Clay bricks, Mz e.g. acc. to EN 771-1:2011	≥1.7	12	0,5	0,3
Vertically perforated clay bricks, HLz e.g. acc. to EN 771-1:2011	≥1.0	12	0,3	0,1
Vertically perforated sand-lime bricks KS L, e.g. acc. to EN 771-2:2011	≥1.4	12	0,4	0,3
Lightweight concrete hollow blocks, Hbl e.g. acc. to EN 771-3:2011	≥0.8	2	0,2	0,2
Vertically perforated clay bricks, HLz e.g. acc. to EN 771-1:2011	≥0.9	12	0,25	0,1
Lightweight concrete solid blocks, Vbl e.g. acc. to EN 771-3:2011	≥0.8	2	0,2	0,1

Table C3: Point thermal transmittance according to EOTA Technical Report TR 025:2007-06

Anchor type	Thickness of insulation h_D [mm]	Point thermal transmittance χ [W/K]
KEW TSDL-V (galvanized steel)	50[1)] - 270	0,002
KEW TSDL-V (stainless steel)	50[2)] - 270	0,001

[1)] for vertically perforated bricks and h_D = 50 mm: χ = 0,001 W/K
[2)] for concrete and h_D = 50 mm: χ = 0,002 W/K

Table C4: Plate stiffness according to EOTA Technical Report TR 026:2007-06

Anchor type	Diameter of anchor plate [mm]	Load resistance of anchor plate [kN]	Plate stiffness [kN/mm]
KEW TSDL-V	60	1,75	1,24

Insulation support – metal nail KEW TSDL-V and KEW TSD-V WS	**Annex C 2**
Performances Displacements, point thermal transmittance, plate stiffness	