Deutsches Institut für Bautechnik DIBt

Member of EOTA
www.eota.eu

Approval body for construction products and types of construction

Bautechnisches Prüfamt

An institution established by the Federal and Laender Governments

Designated according to Article 29 of Regulation (EU) No 305/2011 and member of EOTA (European Organisation for Technical Assessment)

European Technical Assessment

ETA-08/0314 of 24 August 2020

English translation prepared by DIBt - Original version in German language

General Part

Technical Assessment Body issuing the European Technical Assessment:	Deutsches Institut für Bautechnik
Trade name of the construction product	Insulation support TSBD, TSBD X, TSBDL, TSBD WS and TSBD WSG
Product family to which the construction product belongs	Screwed-in plastic anchor for fixing of external thermal insulation composite systems with rendering in concrete and masonry
Manufacturer	KEW Kunststofferzeugnisse GmbH Wilthen Dresdener Straße 19 02681 Wilthen DEUTSCHLAND
Manufacturing plant	KEW Kunststofferzeugnisse GmbH Wilthen Dresdener Straße 19 02681 Wilthen DEUTSCHLAND
This European Technical Assessment contains	26 pages including 3 annexes which form an integral part of this assessment
This European Technical Assessment is issued in accordance with Regulation (EU) No 305/2011, on the basis of	EAD 330196-01-0604, Edition 10/2017
This version replaces	ETA-08/0314 issued on 15 April 2015

Deutsches Institut für Bautechnik
Kolonnenstraße 30 B | 10829 Berlin | GERMANY | Phone: +49 30 78730-0 | Fax: +49 30 78730-320 | Email: dibt@dibt.de | www.dibt.de

The European Technical Assessment is issued by the Technical Assessment Body in its official language. Translations of this European Technical Assessment in other languages shall fully correspond to the original issued document and shall be identified as such.

Communication of this European Technical Assessment, including transmission by electronic means, shall be in full. However, partial reproduction may only be made with the written consent of the issuing Technical Assessment Body. Any partial reproduction shall be identified as such.

This European Technical Assessment may be withdrawn by the issuing Technical Assessment Body, in particular pursuant to information by the Commission in accordance with Article 25(3) of Regulation (EU) No 305/2011.

Specific Part

1 Technical description of the product

The insulation support metal screw TSBD, TSBD X, TSBDL, TSBD WS und TSBD WSG is a screwed-in anchor which consists of a plastic part made of polypropylene (virgin material) and an accompanying specific screw of galvanised steel or stainless steel and an anchor cap made of polystyrene (for mounting the anchor on the surface of the insulating material) or an insulation cover made of polystyrene or mineral wool (for deep mounting of the anchor in the insulating material).

The anchor types TSBD, TSBD X und TSBDL may in addition be combined with the insulation discs DSB 90, DSB 110 and DSB 140.

The head of the screw for anchor type TSBD has an additional plastic coating.

The product description is given in Annex A.

2 Specification of the intended use in accordance with the applicable European Assessment Document

The performances given in Section 3 are only valid if the anchor is used in compliance with the specifications and conditions given in Annex B.

The verification and assessment methods on which this European Technical Assessment is based lead to the assumption of a working life of the anchor of at least 25 years. The indications given on the working life cannot be interpreted as a guarantee given by the producer, but are to be regarded only as a means for choosing the right products in relation to the expected economically reasonable working life of the works.

3 Performance of the product and references to the methods used for its assessment

3.1 Safety and accessibility in use (BWR 4)

Essential characteristic	Performance
Characteristic load bearing capacity	
- Characteristic resistance under tension load	See Annex C 1
- Minimum edge distance and spacing	See Annex B 2
Displacements	See Annex C 2
Plate stiffness	See Annex C 5

3.2 Energy economy and heat retention (BWR 6)

Essential characteristic	Performance
Point thermal transmittance	See Annex C 3 - C 5

4 Assessment and verification of constancy of performance (AVCP) system applied, with reference to its legal base

In accordance with EAD No. 330196-01-0604, the applicable European legal act is: [97/463/EC].

The system to be applied is: 2+

5 Technical details necessary for the implementation of the AVCP system, as provided for in the applicable EAD

Technical details necessary for the implementation of the AVCP system are laid down in the control plan deposited with Deutsches Institut für Bautechnik.

Issued in Berlin on 24 August 2020 by Deutsches Institut für Bautechnik

BD Dipl.-Ing. Andreas Kummerow
Head of Department

beglaubigt:
Aksünger

TSBD

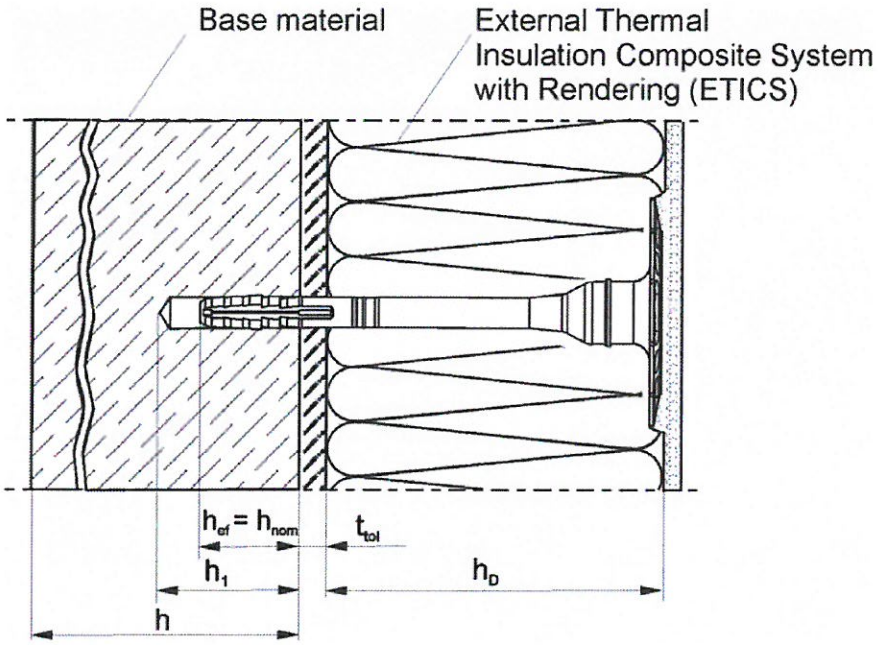

TSBD X

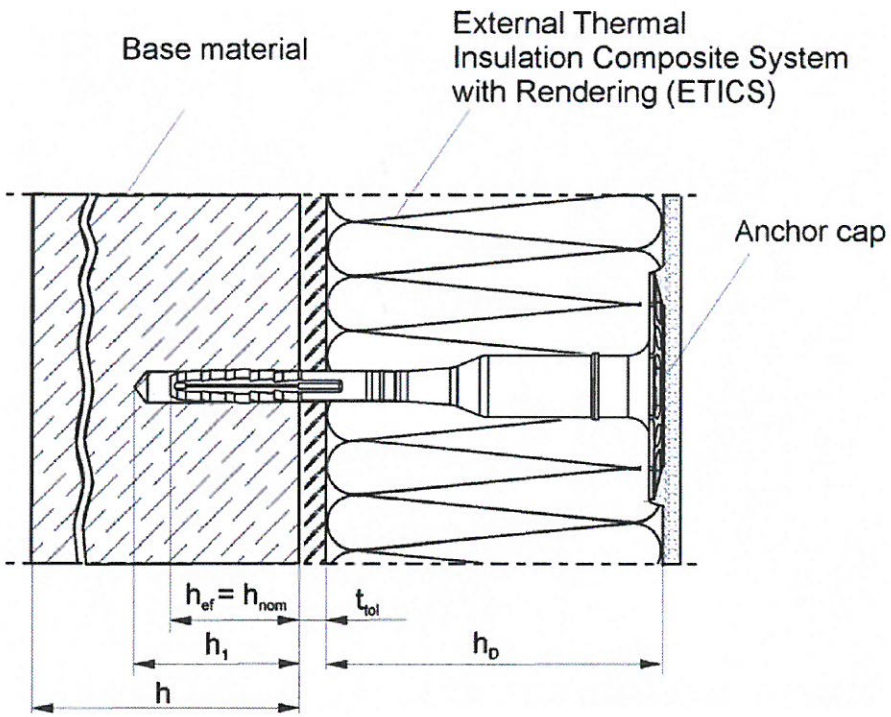

Insulation support •TSBD • TSBD X • TSBDL • TSBD WS • TSBD WSG	Annex A 1
Product description Intended use: TSBD, TSBD X	

TSBDL

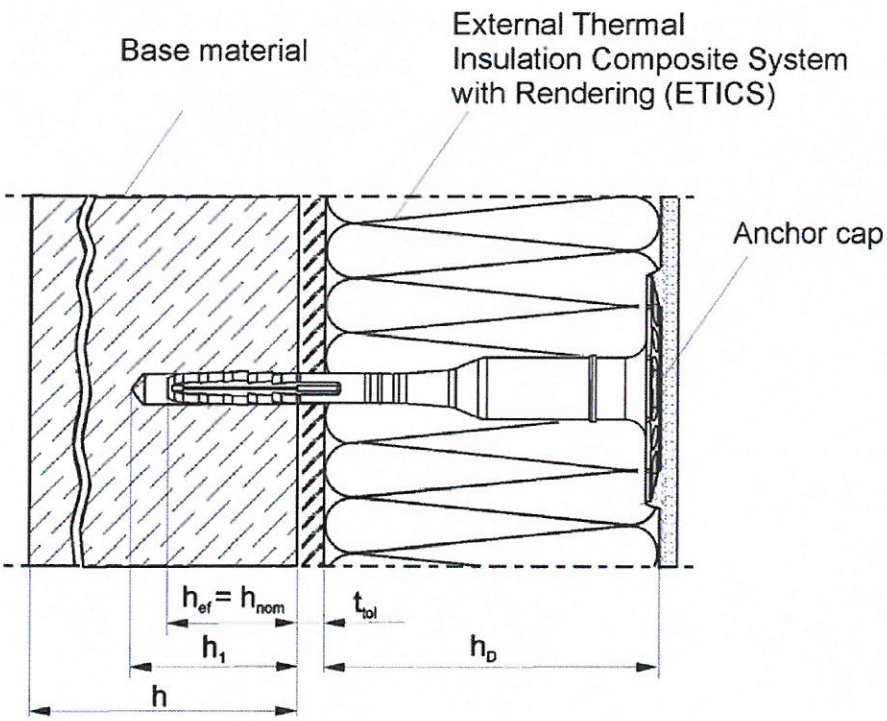

Insulation support •TSBD • TSBD X • TSBDL • TSBD WS • TSBD WSG	Annex A 2
Product description Intended use: TSBDL	

TSBD + Insulation cover

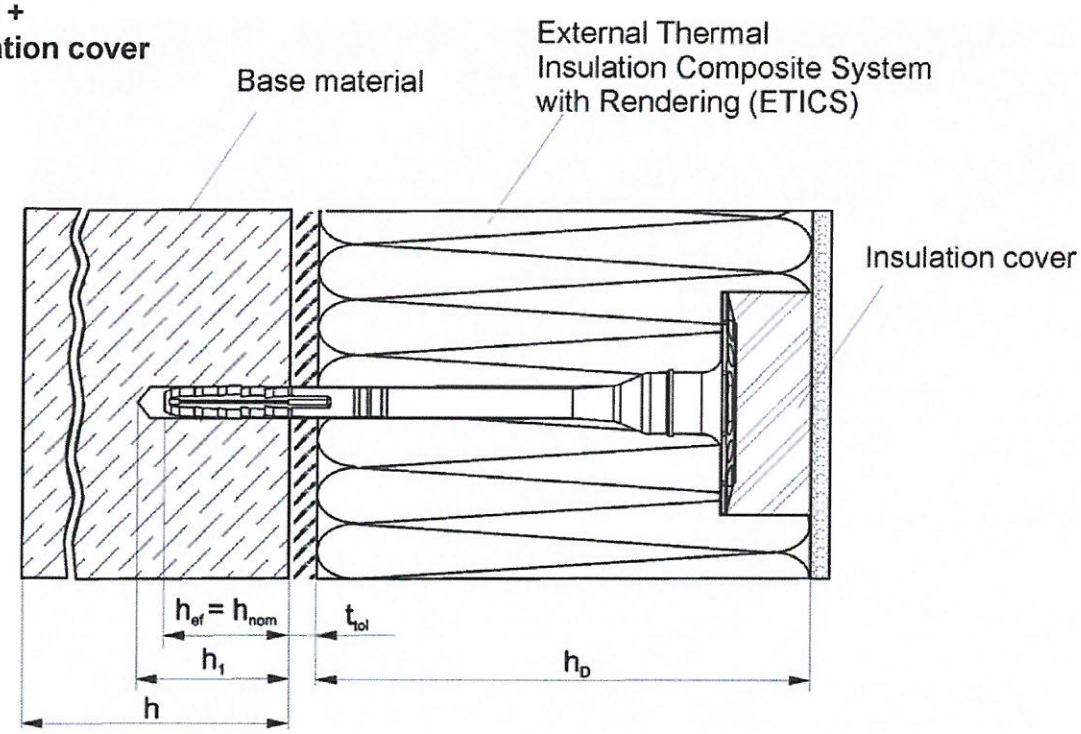

TSBD X + Insulation cover

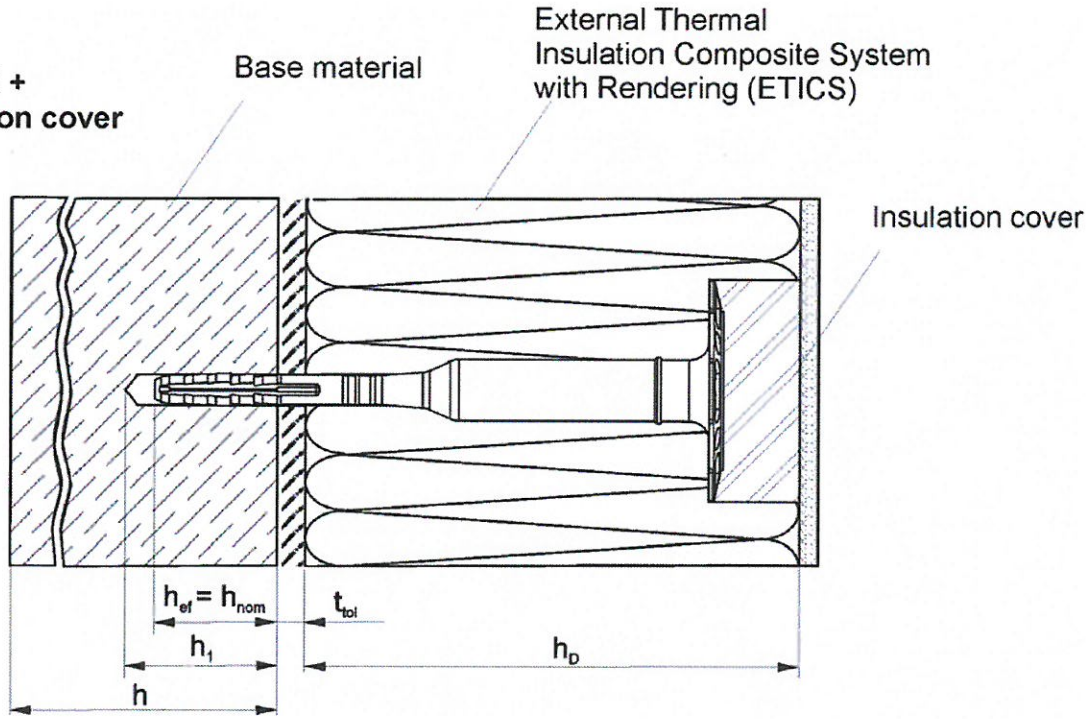

Insulation support •TSBD • TSBD X • TSBDL • TSBD WS • TSBD WSG	Annex A 3
Product description Intended use + Insulation cover: TSBD, TSBD X	

TSBDL +
Insulation cover

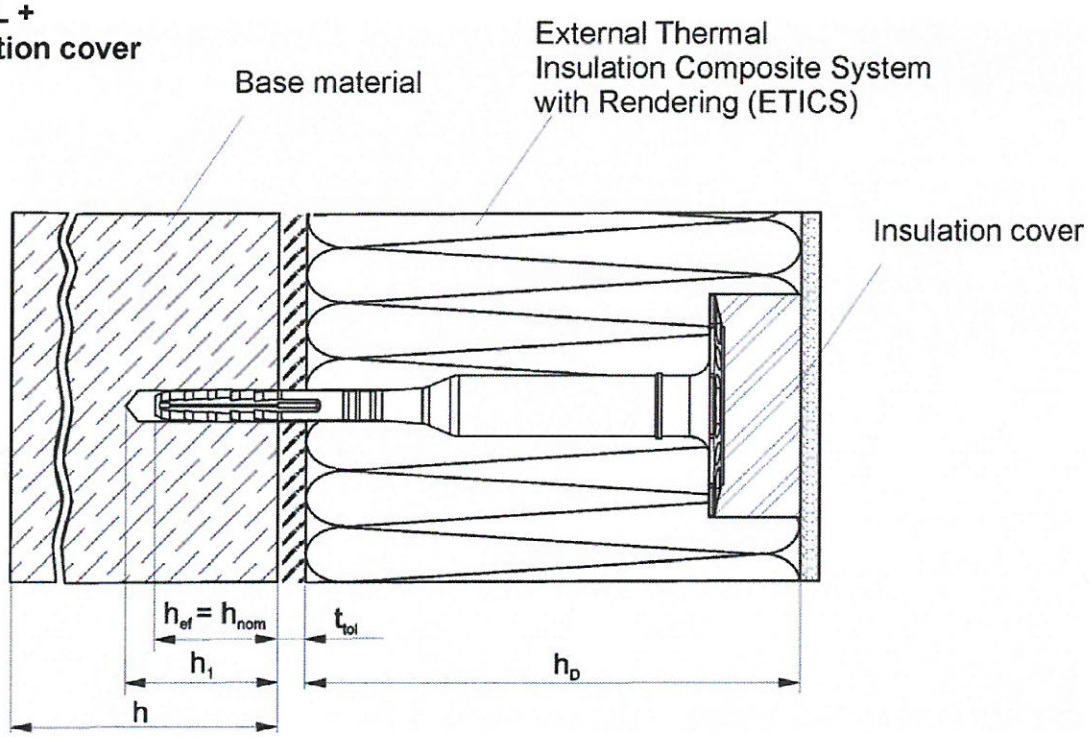

Insulation support •TSBD • TSBD X • TSBDL • TSBD WS • TSBD WSG	Annex A 4
Product description Intended use + Insulation cover: TSBDL	

TSBD WS

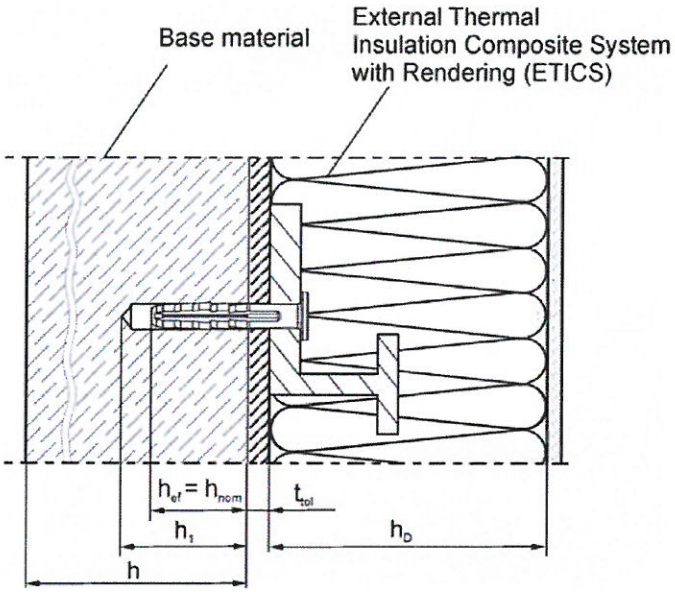

TSBD WSG

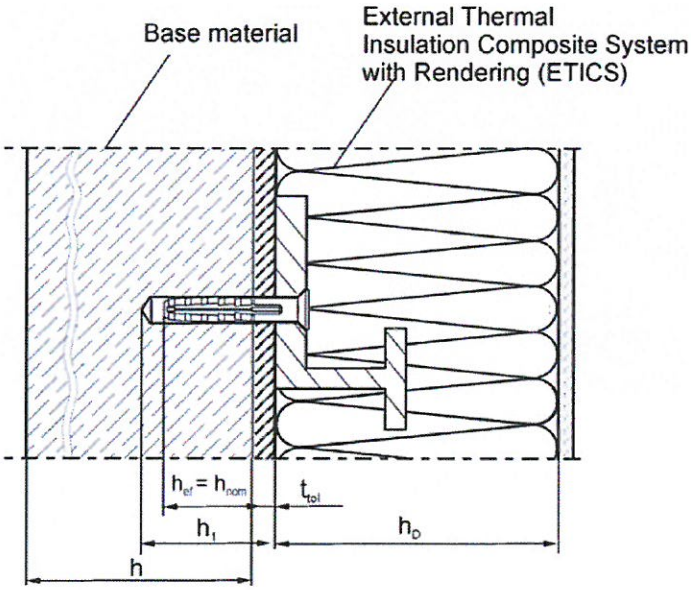

Legend

h_{ef} = effective anchorage depth

h_1 = depth of drilled hole to deepest point

h = thickness of member (wall)

h_D = thickness of insulation material

t_{tol} = thickness of equalizing layer or non-load bearing coating

Insulation support •TSBD • TSBD X • TSBDL • TSBD WS • TSBD WSG	Annex A 5
Product description Intended use: TSBD WS, TSBD WSG	

TSBD

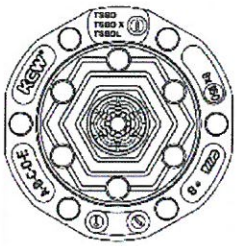

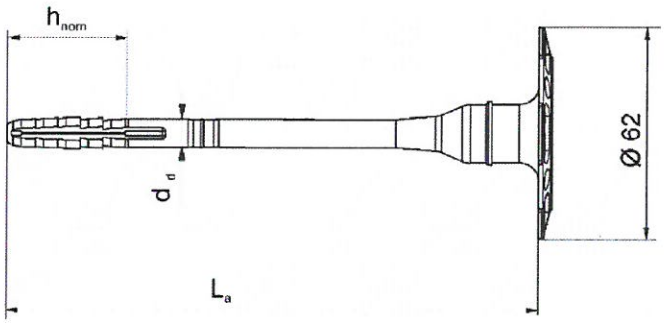

Marking

Company logo – (KEW®)

Anchor type – (TSBD)

– (TSBD X)

– (TSBDL)

Diameter – (ø8)

Length of anchor – (e.g. 160)

Special screw with special head

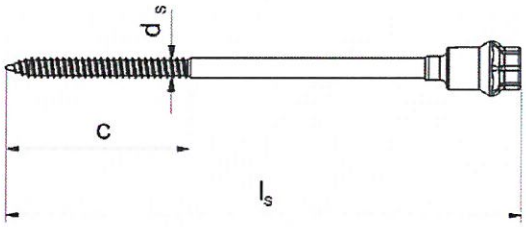

TSBD X

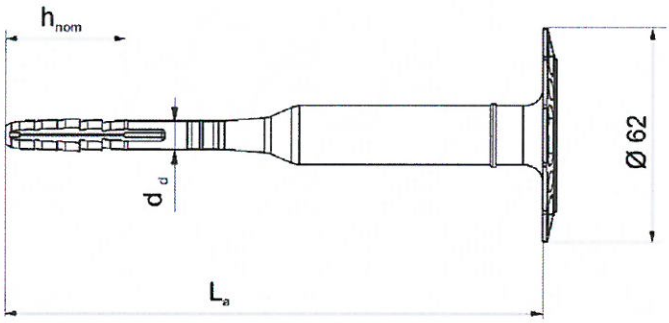

Special screw

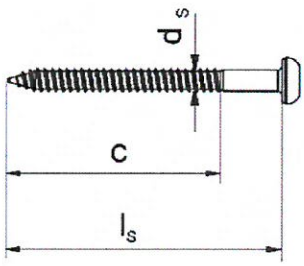

TSBDL

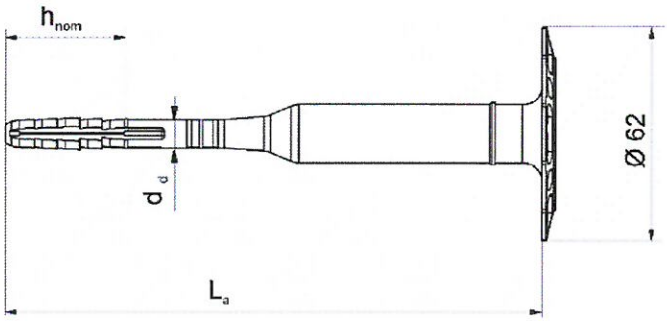

Special screw

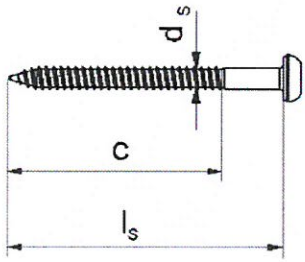

Insulation support •TSBD • TSBD X • TSBDL • TSBD WS • TSBD WSG	Annex A 6
Product description Marking of the anchor sleeve, dimensions: TSBD, TSBD X, TSBD L	

TSBD WS / WSG

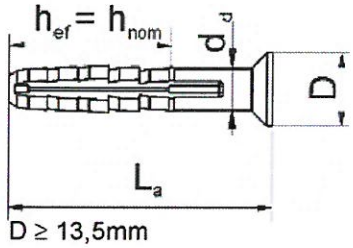

Installation tool

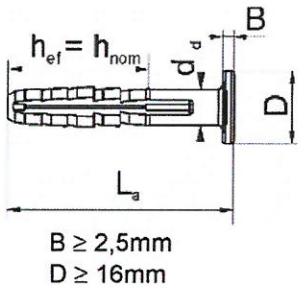

Anchor cap I
to close the anchor

Special screw

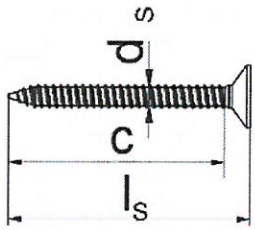

Anchor cap II
to close the anchor

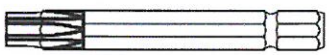

Insulation cover

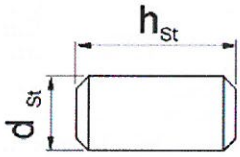

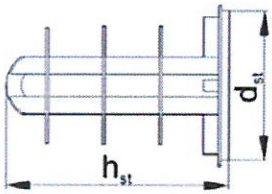

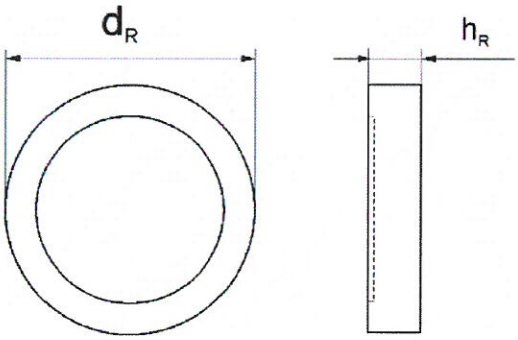

Insulation support •TSBD • TSBD X • TSBDL • TSBD WS • TSBD WSG	Annex A 7
Product description Marking of the anchor sleeve, installation tool, dimensions: TSBD WS / WSG, Installation tool, Anchor cap	

Table A1: Dimensions TSBD

Anchor type	Anchor sleeve					Special screw		
	L_a min [mm]	L_a max [mm]	d_d [mm]	h_{ef} [mm]		d_s [mm]	c [mm]	l_s [mm]
KEW® - TSBD base material group A-B-C	**100**	**440**	**8**	**30**		**5,5**	**52**	**L_a + 5mm**
KEW® - TSBD base material group D-E	**100**	**440**	**8**	**30**	**50**	**5,5**	**52**	**L_a + 5mm**
Determination of max. thickness of insulation: **$h_D = L_a - h_{nom} - t_{tol}$**								
e.g.: TSBD 8x160	**L_a= 160**		**h_{ef}= 30**			**t_{tol}= 10**		
	thickness of insulation material **$h_{D\,max.}$ = 120**							
e.g.: TSBD 8x160	**L_a= 160**		**h_{ef}= 50**			**t_{tol}= 10**		
	thickness of insulation material **$h_{D\,max.}$ = 100**							
Determination of max. thickness of insulation: **$h_D = L_a - h_{nom} - t_{tol}$ + Insulation cover**								
e.g.: TSBD 8x160 With Insulation cover 20mm	**L_a= 160**		**h_{ef}= 30**			**t_{tol}= 10**		
	thickness of insulation material **$h_{D\,max.}$ = 140**							
e.g.: TSBD 8x160 With Insulation cover 20mm	**L_a= 160**		**h_{ef}= 50**			**t_{tol}= 10**		
	thickness of insulation material **$h_{D\,max.}$ = 120**							

Table A2: Dimensions TSBD X

Anchor type	Anchor sleeve					Special screw		
	L_a min [mm]	L_a max [mm]	d_d [mm]	h_{ef} [mm]		d_s [mm]	c [mm]	l_s [mm]
KEW® - TSBD X base material group A-B-C	**100**	**440**	**8**	**30**		**5,5**	**52**	**78**
KEW® - TSBD X base material group D-E	**100**	**440**	**8**	**30**	**50**	**5,5**	**52**	**78**
Determination of max. thickness of insulation: **$h_D = L_a - h_{nom} - t_{tol}$**								
e.g.: TSBD X 8x160	**L_a= 160**		**h_{ef}= 30**			**t_{tol}= 10**		
	thickness of insulation material **$h_{D\,max.}$ = 120**							
e.g.: TSBD X 8x160	**L_a= 160**		**h_{ef}= 50**			**t_{tol}= 10**		
	thickness of insulation material **$h_{D\,max.}$ = 100**							
Determination of max. thickness of insulation: **$h_D = L_a - h_{nom} - t_{tol}$ + Insulation cover**								
e.g.: TSBD X 8x160 With Insulation cover 20mm	**L_a= 160**		**h_{ef}= 30**			**t_{tol}= 10**		
	thickness of insulation material **$h_{D\,max.}$ = 140**							
e.g.: TSBD X 8x160 With Insulation cover 20mm	**L_a= 160**		**h_{ef}= 50**			**t_{tol}= 10**		
	thickness of insulation material **$h_{D\,max.}$ = 120**							

Insulation support •TSBD • TSBD X • TSBDL • TSBD WS • TSBD WSG

Product description
Dimensions: TSBD, TSBD X

Annex A 8

Table A3: Dimensions TSBDL

Anchor type	Anchor sleeve					Special screw			
	L_a min [mm]	L_a max [mm]	d_d [mm]	h_{ef} [mm]		d_s [mm]	c [mm]	$l_{s\,min}$ [mm]	$l_{s\,max}$ [mm]
KEW® - TSBDL base material group A-B-C	**100**	**440**	**8**	**30**		**5,5**	**52**	**70**	**310**
KEW® - TSBDL base material group D-E	**100**	**440**	**8**	**30**	**50**	**5,5**	**52**	**70**	**310**
Determination of max. thickness of insulation: $h_D = L_a - h_{nom} - t_{tol}$									
e.g.: TSBDL 8x160	L_a= 160			h_{ef}= 30			t_{tol}= 10		
	thickness of insulation material $h_{D\,max.}$ = 120								
e.g.: TSBDL 8x160	L_a= 160			h_{ef}= 50			t_{tol}= 10		
	thickness of insulation material $h_{D\,max.}$ = 100								
Determination of max. thickness of insulation: $h_D = L_a - h_{nom} - t_{tol}$ + Insulation cover									
e.g.: TSBDL 8x160 With Insulation cover 20mm	L_a= 160			h_{ef}= 30			t_{tol}= 10		
	thickness of insulation material $h_{D\,max.}$ = 140								
e.g.: TSBDL 8x160 With Insulation cover 20mm	L_a= 160			h_{ef}= 50			t_{tol}= 10		
	thickness of insulation material $h_{D\,max.}$ = 120								

Table A4: Dimensions TSBD WS / WSG

Anchor type	Anchor sleeve					Special screw		
	L_a min [mm]	L_a max [mm]	d_d [mm]	h_{ef} [mm]		d_s [mm]	c [mm]	l_s [mm]
KEW® - TSBD WS / WSG base material group A-B-C	**50**	**250**	**8**	**30**		**5,5**	**52**	**L_a + 5mm**
KEW® - TSBD WS / WSG base material group D-E	**70**	**250**	**8**	**30**	**50**	**5,5**	**52**	**L_a + 5mm**

Insulation support •TSBD • TSBD X • TSBDL • TSBD WS • TSBD WSG

Product description
Dimensions: TSBDL, TSBD WS, TSBD WSG

Annex A 9

Table A5: Dimensions Insulation cover and Anchor cap

Anchor type	Insulation cover		Anchor cap I		Anchor cap II	
	d_R [mm]	h_R [mm]	d_{St} [mm]	h_{St} [mm]	d_{St} [mm]	h_{St} [mm]
KEW® - TSBD	**66**	**20**	**-**	**-**	**-**	**-**
KEW® - TSBD X	**66**	**20**	**13**	**30**	**15**	**20**
KEW® - TSBDL	**66**	**20**	**13**	**30**	**15**	**20**

Table A6: Materials

Member	Materials
Anchor sleeve	Polypropylen(virgin material), colour: papyrus white or nature
Special screw	Steel, galvanized A2G or A2F according to EN ISO 4042:2018
	Stainless steel according to EN 10088-3:2014; mat. No. 1.4401, 1.4571
Special head on Special screw	PA GF
Anchor cap	Polystyrene, Polypropylene, Polyethylene, Mineral wool
Insulation cover	Polystyrene, Mineral wool, Polyurethane

Insulation support •TSBD • TSBD X • TSBDL • TSBD WS • TSBD WSG

Product description
Dimensions: Installation tool, Anchor cap
Materials

Annex A 10

Insulation discs

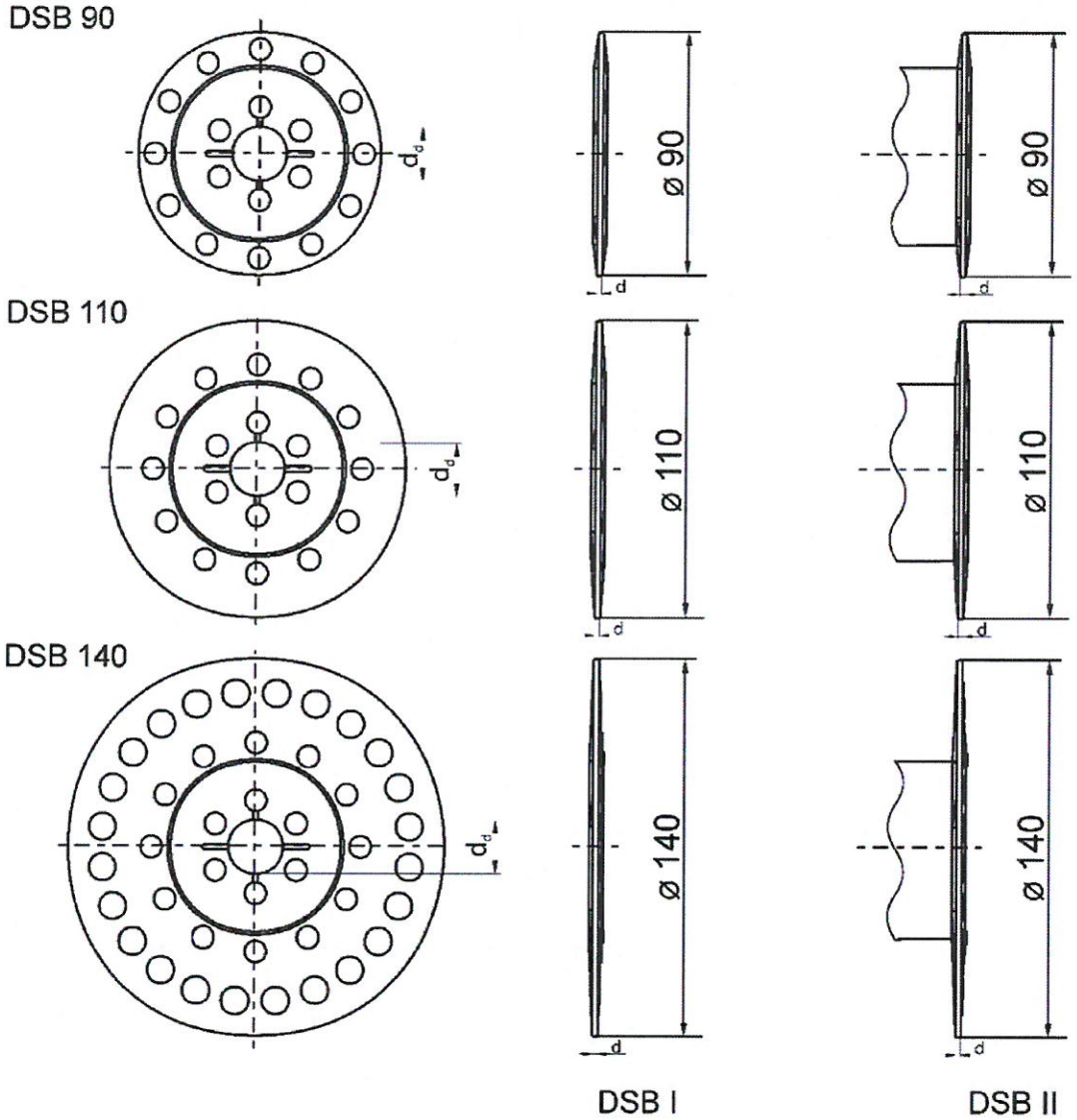

Table A7: Insulation discs, diameters and material

Insulation discs	Ø D [mm]	Ø d_d [mm]	d [mm]	Material
DSB I / II 90	90	20	5	PA 6, PP
DSB I / II 110	110	20	5	PA 6, PP
DSB I / II 140	140	20	5	PA 6, PP

Insulation support •TSBD • TSBD X • TSBDL • TSBD WS • TSBD WSG

Product description
Additional plates in combination with KEW®- TSBD, TSBD X , TSBDL

Annex A 11

Specifications of intended use

Anchorages subject to:

- The anchor may only be used for transmission of wind suction loads and shall not be used for the transmission of dead loads of the thermal insulation composite system.

Base materials:

- Normal weight concrete (base material group A) according to Annex C 1.
- Solid masonry (base material group B), according to Annex C 1.
- Hollow or perforated masonry (base material group C), according to Annex C 1.
- Lightweight aggregate concrete (base material group D), according to Annex C 1.
- Autoclaved aerated concrete (base material group E), according to Annex C 1.
- For other base materials of the use categories A, B, C, D or E the characteristic resistance of the anchor may be determined by job site tests according to EOTA Technical Report TR 051 edition December 2016.

Temperature Range:

- 0°C to +40°C (max. short term temperature +40°C and max. long term temperature +24°C)

Design:

- The anchorages are designed under the responsibility of an engineer experienced in anchorages and masonry work with the partial safety factors γ_M = 2,0 and γ_F = 1,5, if there are no other national regulations.
- Verifiable calculation notes and drawings are prepared taking account of the loads to be anchored. The position of the anchor is indicated on the design drawings.
- Fasteners are only to be used for multiple fixings for non-structural application.

Installation:

- Hole drilling by the drill modes according to Annex C 1.
- Anchor installation carried out by appropriately qualified personnel and under the supervision of the person responsible for technical matters of the site.
- Installation temperature from 0°C to +40°C
- Exposure to UV due to solar radiation of the anchor not protected by rendering ≤ 6 weeks

Insulation support •TSBD • TSBD X • TSBDL • TSBD WS • TSBD WSG	Annex B 1
Intended Use Specifications	

Table B1: Installation parameters

Anchor type			KEW®- TSBD, TSBD X, TSBDL		
			base material group		
			A-B-C	D-E	
Drill hole diameter	d_0 =	[mm]	**8**	**8**	
Cutting diameter of drill bit	$d_{cut} \leq$	[mm]	**8,45**	**8,45**	
Depth of drilled hole to deepest point	$h_1 \geq$	[mm]	**40**	**40**	**60**
Effective anchorage depth	h_{ef} =	[mm]	**30**	**30**	**50**

Table B2: Minimum distances an dimension

			KEW®- TSBD, TSBD X, TSBDL
Minimum thickness of member	h =	[mm]	**100**
Minimum spacing	s_{min} =	[mm]	**100**
Minimum edge distance	c_{min} =	[mm]	**100**

Edge and spacing distances

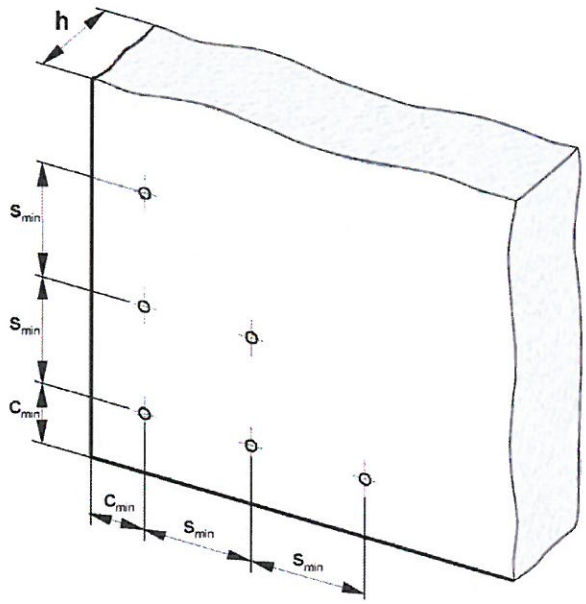

Insulation support •TSBD • TSBD X • TSBDL • TSBD WS • TSBD WSG

Intended Use
Installation parameters,
Edge distances and spacing

Annex B 2

Installation instructions TSBD surface-flush mounted

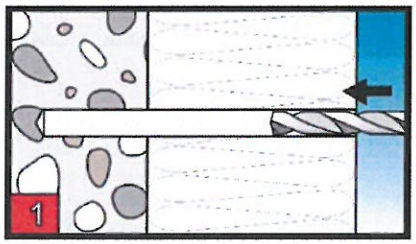

Create a hole about observation of the drill method according Annex C 1

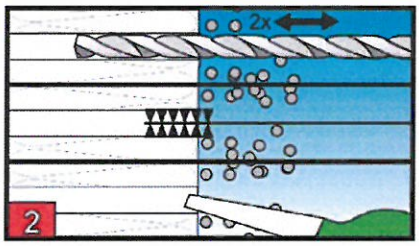

Holes to be cleaned of drilling dust.

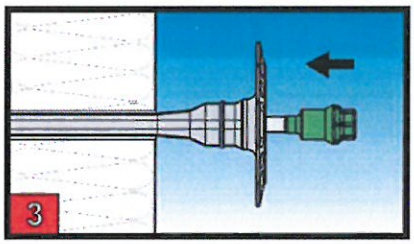

Insert the anchor into the hole until the plate rests on the insulation.

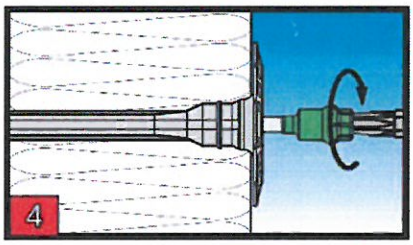

Set the screw with the matching bit

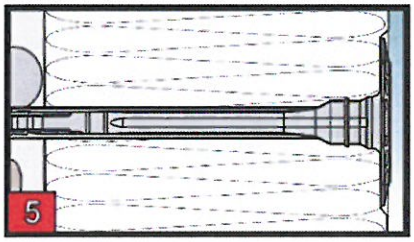

Surface-flush mounted

Insulation support •TSBD • TSBD X • TSBDL • TSBD WS • TSBD WSG	Annex B 3
Intended Use Installation instructions TSBD - surface-flush mounted	

Installation instructions TSBD X / TSBDL surface-flush mounted

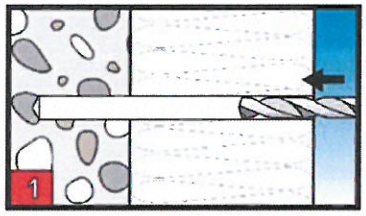

Create a hole about observation of the drill method according Annex C 1

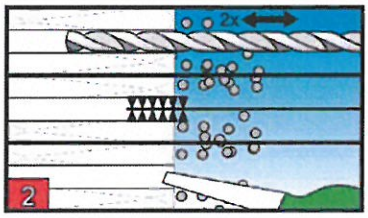

Holes to be cleaned of drilling dust.

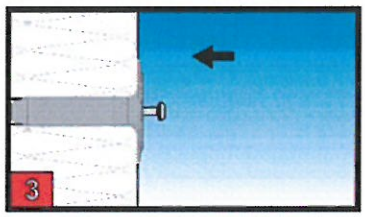

Insert the anchor into the hole until the plate rests on the insulation.

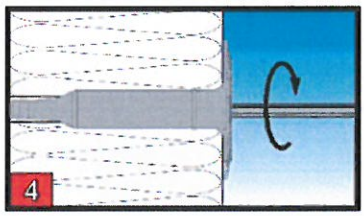

Set the screw with the matching bit

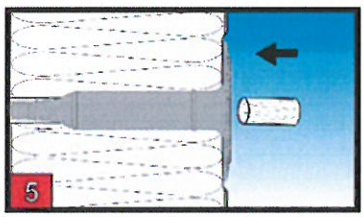

Close the anchor wit Anchor cap I or Anchor cap II or foam

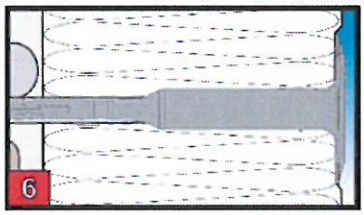

Surface-flush mounted

Insulation support •TSBD • TSBD X • TSBDL • TSBD WS • TSBD WSG	Annex B 4
Intended Use Installation instructions TSBD X / TSBDL - surface-flush mounted	

Installation instructions TSBD deepened mounted

Create a hole about observation of the drill method according Annex C 1

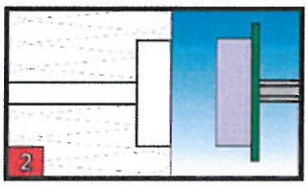

Introduce the indentation in the insulation

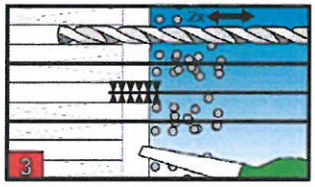

Holes to be cleaned of drilling dust.

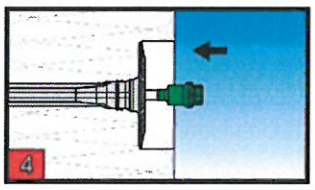

Insert the anchor into the hole until the plate rests on the insulation.

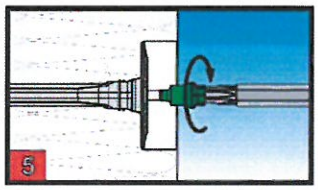

Set the screw with the matching bit

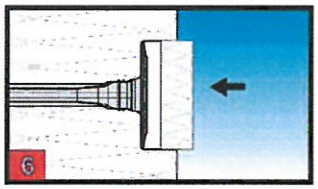

Put the Insulation cover into the insulation

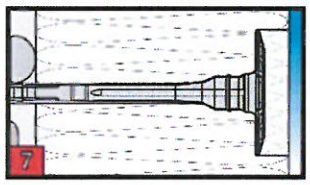

Deepened mounted

Insulation support •TSBD • TSBD X • TSBDL • TSBD WS • TSBD WSG	Annex B 5
Intended Use Installation instructions TSBD - deepened mounted	

Installation instructions TSBD X / TSBDL deepened mounted

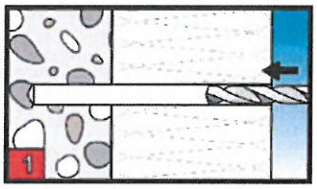

Create a hole about observation of the drill method according Annex C 1

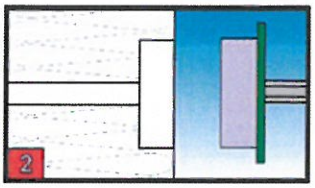

Introduce the indentation in the insulation

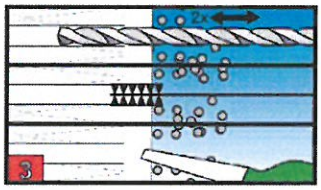

Holes to be cleaned of drilling dust.

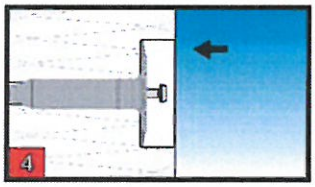

Insert the anchor into the hole until the plate rests on the insulation.

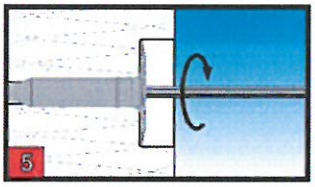

Set the screw with the matching bit

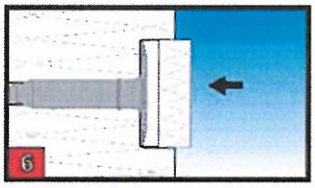

Put the Insulation cover into the insulation

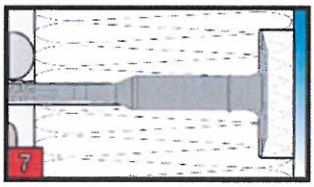

Deepened mounted

Insulation support •TSBD • TSBD X • TSBDL • TSBD WS • TSBD WSG	Annex B 6
Intended Use Installation instructions TSBD X / TSBDL - deepened mounted	

Table C1:Characteristic resistance N_{Rk} in concrete and masonry for a single anchor in kN

Base material	Bulk-density ρ [kg/dm³]	Com-pressive strength f_b [N/mm²]	Remarks	Drill method	N_{Rk} [kN]
Concrete C12/15			EN 206-1:2000	Hammer drilling	**1,5**
Concrete C16/20 – C50/60			EN 206-1:2000		**1,5**
Sand-lime solid bricks, KS e.g. acc. to EN 771-2:2011	≥1.8	12	Vertically perforation up to 15%		**1,5**
Brick, Mz e.g. acc. to EN 771-1:2011	≥1.7	12	Vertically perforation up to 15%		**1,5**
Lightweight concrete solid blocks, Vbl 2 e.g. acc. to EN 771-3:2011	≥0.8	2	with outer web thickness ≥ 43 mm		**0,75**
Lightweight concrete solid blocks, Vbl 4 e.g. acc. to EN 771-3:2011	≥0.8	4	with outer web thickness ≥ 43 mm		**1,2**
Vertically perforated clay bricks, HLz e.g. acc. to EN 771-1:2011 with outer web thickness ≥ 12 mm	≥1.0	12	Vertically perforation more than 15% and less than 50%	Rotary drilling	**0,9**
Vertically perforated sand-lime bricks, KS L e.g. acc. to EN 771-2:2011 with outer web thickness ≥ 20 mm	≥1.4	12	Vertically perforation more than 15% and less than 50%		**1,5**
Lightweight concrete hollow blocks 4K Hbl e.g. acc. to EN 771-3:2011	≥0.9	2	with outer web thickness ≥ 30 mm		**0,75**
Lightweight concrete hollow blocks 1K Hbl e.g. acc. to EN 771-3:2011	≥0.8	2	with outer web thickness ≥ 30 mm		**0,9**
Vertically perforated clay bricks Hlz 250x380x235 d = 250 mm with outer web thickness a ≥ 16 mm	≥1.0	6	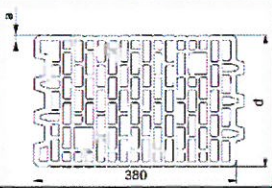		**0,5**
Lightweight aggregate concrete, LAC 4 e.g. acc. to EN 1520:2011 / EN 771-3:2011	≥1.0	4	h_{ef} ≥ 30mm	Hammer drilling	**0,4**
			h_{ef} ≥ 50mm		**0,9**
Lightweight aggregate concrete, LAC 6 e.g. acc. to EN 1520:2011 / EN 771-3:2011	≥1.0	6	h_{ef} ≥ 30mm		**0,5**
			h_{ef} ≥ 50mm		**1,2**
Autoclaved aerated concrete PP4-0,5 e.g. acc. to EN 771-4:2011	≥0.5	4	h_{ef} ≥ 30mm	Rotary drilling	**0,30**
			h_{ef} ≥ 50mm		**0,75**

Insulation support •TSBD • TSBD X • TSBDL • TSBD WS • TSBD WSG

Performances
Characteristic tension resistance of the anchor

Annex C 1

Table C2: Displacements

Base material	Bulk-density ρ [kg/dm³]	Compres-sive Strength f_b [N/mm²]	Tension load N [kN]	Displacements $\delta_m(N)$ [mm]
Concrete C12/15-C50/60 EN 206-1:2000			0,50	0,2
Sand-lime solid bricks, KS e.g. acc. to EN 771-2:2011	≥1.8	12	0,50	0,3
Solid clay brick, Mz e.g. acc. to EN 771-1:2011	≥1.7	12	0,50	0,3
Lightweight concrete solid blocks, Vbl 2 e.g. acc. to EN 771-3:2011	≥0.8	2	0,25	0,3
Lightweight concrete solid blocks, Vbl 4 e.g. acc. to EN 771-3:2011	≥0.8	4	0,40	0,4
Vertically perforated clay bricks, HLz e.g. acc. to EN 771-1:2011	≥1.0	12	0,30	0,1
Vertically perforated sand-lime bricks, KS L e.g. acc. to EN 771-2:2011	≥1.4	12	0,50	0,3
Lightweight concrete hollow blocks 4K Hbl e.g. acc. to EN 771-3:2011	≥0.9	2	0,25	0,1
Lightweight concrete hollow blocks 1K Hbl e.g. acc. to EN 771-3:2011	≥0.8	2	0,30	0,2
Vertically perforated clay bricks 250x380x235	≥1.0	6	0,15	0,1
Lightweight aggregate concrete, LAC 4 e.g. acc. to EN 1520:2011 / EN 771-3:2011	≥1.0	4	h_{ef} > 30 mm: 0,15	0,1
			h_{ef} ≥ 50 mm: 0,30	0,2
Lightweight aggregate concrete, LAC 6 e.g. acc. to EN 1520:2011 / EN 771-3:2011	≥1.0	6	h_{ef} > 30 mm: 0,15	0,1
			h_{ef} ≥ 50 mm: 0,40	0,2
Autoclaved aerated concrete PP4-0,5 e.g. acc. to EN 771-4:2011	≥0,5	4	h_{ef} > 30 mm: 0,25	0,01
			h_{ef} ≥ 50 mm: 0,10	0,15

Insulation support •TSBD • TSBD X • TSBDL • TSBD WS • TSBD WSG

Performances
Displacements

Annex C 2

Table C3: Point thermal transmittance according to EOTA Technical Report TR 025:2016-05

Anchor type	thickness of insulation h_D [mm]	Point thermal transmittance χ [W/K]
KEW – TSBD With specific screw, galvanized steel	≤150mm	0,003
KEW – TSBD With specific screw, galvanized steel	>150mm	0,002
KEW – TSBD With specific screw, stainless steel	≤150mm	0,002
KEW – TSBD With specific screw, stainless steel	>150mm	0,001

Anchor type	thickness of insulation h_D [mm]	Point thermal transmittance χ [W/K]
KEW – TSBD + Insulation cover With specific screw, galvanized steel	≤150mm	0,002
KEW – TSBD + Insulation cover With specific screw, galvanized steel	>150mm	0,002
KEW – TSBD + Insulation cover With specific screw, stainless steel	≤150mm	0,001
KEW – TSBD + Insulation cover With specific screw, stainless steel	>150mm	0,001

Insulation support •TSBD • TSBD X • TSBDL • TSBD WS • TSBD WSG

Performances
Point thermal transmittance

Annex C 3

Anchor type	thickness of insulation h_D [mm]	Point thermal transmittance χ [W/K]
KEW – TSBD X With specific screw, galvanized steel	≤80mm	0,002
KEW – TSBD X With specific screw, galvanized steel	>80mm	0,001
KEW – TSBD X With specific screw, stainless steel	≤240mm	0,001
KEW – TSBD X With specific screw, stainless steel	>240mm	0,000

Anchor type	thickness of insulation h_D [mm]	Point thermal transmittance χ [W/K]
KEW – TSBD X + Insulation cover With specific screw, galvanized steel	≤150mm	0,001
KEW – TSBD X + Insulation cover With specific screw, galvanized steel	>150mm	0,001
KEW – TSBD X + Insulation cover With specific screw, stainless steel	≤100mm	0,001
KEW – TSBD X + Insulation cover With specific screw, stainless steel	>100mm	0,000

Insulation support •TSBD • TSBD X • TSBDL • TSBD WS • TSBD WSG

Performances
Point thermal transmittance

Annex C 4

Anchor type	thickness of insulation h_D [mm]	Point thermal transmittance χ [W/K]
KEW – TSBDL With specific screw, galvanized steel	≤80mm	0,002
KEW – TSBDL With specific screw, galvanized steel	>80mm	0,001
KEW – TSBDL With specific screw, stainless steel	≤240mm	0,001
KEW – TSBDL With specific screw, stainless steel	>240mm	0,000

Anchor type	thickness of insulation h_D [mm]	Point thermal transmittance χ [W/K]
KEW – TSBDL + Insulation cover With specific screw, galvanized steel	≤150mm	0,001
KEW – TSBDL + Insulation cover With specific screw, galvanized steel	>150mm	0,001
KEW – TSBDL + Insulation cover With specific screw, stainless steel	≤100mm	0,001
KEW – TSBDL + Insulation cover With specific screw, stainless steel	>100mm	0,000

Table C4: Plate stiffness according to EOTA Technical Report TR 026:2016-05

Anchor type	Diameter of anchor plates [mm]	Load resistance of anchor plates [kN]	Plate stiffness [kN/mm]
KEW – TSBD	60	2,22	1,6
KEW – TSBD X	60	2,22	1,6
KEW – TSBDL	60	2,22	1,6

Insulation support •TSBD • TSBD X • TSBDL • TSBD WS • TSBD WSG

Performances
Point thermal transmittance, Plate stiffness

Annex C 5