TOIMIVUSDEKLARATSIOON

DoP Nr. KEW - 1109-BPR-2000 **- ee**

1. Tootetüübi ainulaadne identifitseerimiskood: Naelutatav TSD

2. Tüübi-. Partii- või seerianumber või mõni muu element, mis ehitustoote võimaldab identifitseerimist vastavalt artiklile 11(4):

   ETA-04/0030 Lisa A2
   Partiinumber: vt pakendilt

3. Ehitustoote ettenähtud kasutus või kasutused vastavalt rakendatavadel ühtlustatud tehnilisele spetsifikatsioonile, nagu on tootja poolt ettenähtud:

üldine tüüp	Naelutatav plastikankur väliste soojusisolatsiooni viimistlusega
kasutamiseks	ETA-04/0030 Lisa B1
Valik / kategooria	ETA-04/0030 Lisa B1
koormus	ETA-04/0030 Lisa B1
materjal	ETA-04/0030 Lisa A3
temperatuurivahemik	ETA-04/0030 Lisa B1

4. Nimi, registreeritud kaubanduslik nimi või registreeritud kaubamärk ja tootja kontaktaadress vastavalt artiklile 11(5):

   KEW Kunststofferzeugnisse GmbH Wilthen
   Dresdener Straße 19
   02681 Wilthen
   Saksamaa

5. Kui on rakendatav, siis volitatud esindaja, kelle volitus on kaetud artiklis 12(2) näidatud ülesannetega, nimi ja kontaktaadress:

   --

6. Ehitustoote toimimiskindluse hindamise ja kinnitamise süsteem või süsteemid, nagu on määratud Lisas V:

   System 2+

7. Juhul, kui ehitustoodet puudutav toimivusdeklaratsioon on kaetud ühtlustatud standardiga::

   --

8. Ehitustoodet puudutav toimivusdeklaratsioon korral, millele on Euroopa tehniline hinnang:

väljastatud: DIBt Deutsches Institut für Bautechnik

väljastamise alusel: ETA-04/0030 alates 11.09.2014

ETAG 014, Väljaantud veebruaris 2011

Näidatakse läbiviinud teavitatud asutus 1109-BPR on pärast System 2+

i) algne tehase ja tehase tootmise ülevaatus
ii) tehase tootmiskontrolli pidev järelvalve, hinnang ja kinnitus.

Ja järgnev: 1109-BPR-2000

9. Deklareeritud toimivus:

Esmatähtsad omadused	Konstruktsiooni meetod	Konstruktsiooni meetod		Uhtlustatud tehniline määratlus
		Teras, elektro-galvaniseeritud	Roostevaba teras	
Iseloomulik takistus	ETAG 014	ETA-04/0030 Lisa C1	ETA-04/0030 Lisa C1	ETAG 014
Minimaalne servakaugus ja ankru vahekaugus	ETAG 014	ETA-04/0030 Lisa B2	ETA-04/0030 Lisa B2	
Omadused teisaldamisel	ETAG 014	ETA-04/0030 Lisa C3	ETA-04/0030 Lisa C3	
Punkti soojusläbivus vastavalt	ETAG 014	ETA-04/0030 Lisa C2	ETA-04/0030 Lisa C2	
Plaadi jäikus vastavalt	ETAG 014	ETA-04/0030 Lisa C2	ETA-04/0030 Lisa C2	

Artikli 37 või 38 kasutamisele spetsiifilises tehnilises dokumentatsioonis, nõuded, millele toode vastab:

--

10. Toote toimuvus , mis on näidatud punktides 1 ja 2, on vastav punktis 9 deklareeritud toimele.

See toimivusdeklaratsioon on antud välja punktis 4 määratletud tootja ainuvastutusel.

Allkirjastanud tootja eest ja nimel:

André Gedan
(Müügi ja marketingi tegevdirektor)
Wilthen, 20.04.2018

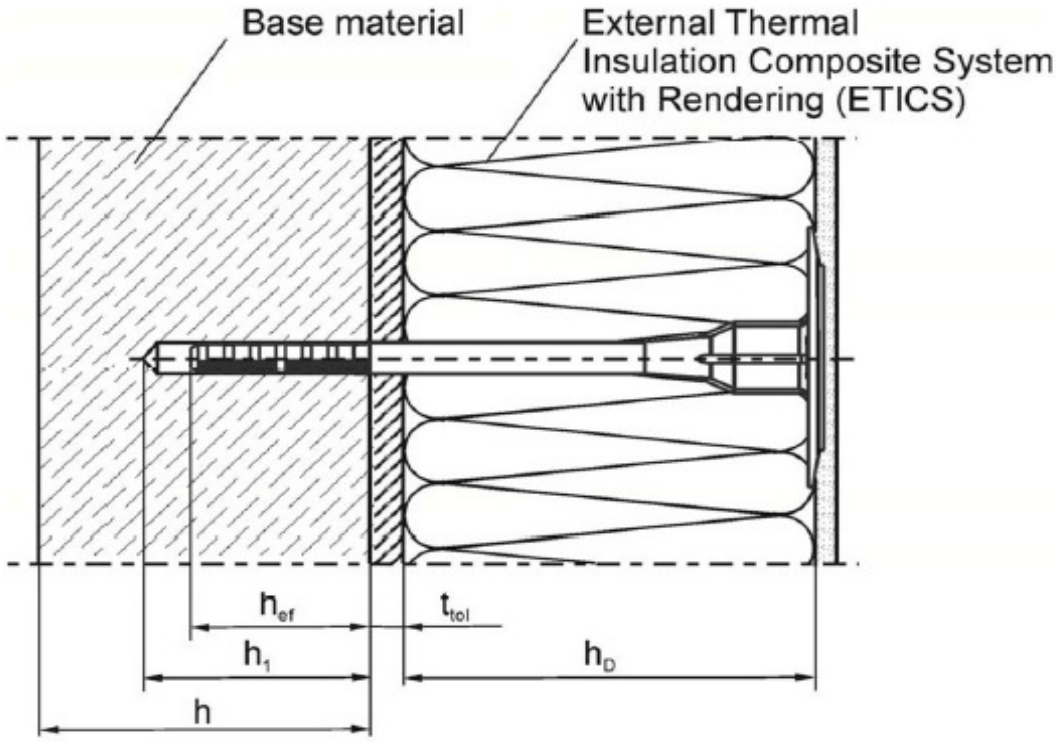

Legend

h_D	=	thickness of insulation material
h_{ef}	=	effective anchorage depth
h	=	thickness of member
h_1	=	depth of drilled hole to deepest point
t_{tol}	=	thickness of equalizing layer or non-load-bearing coating

Insulation support KEW TSD 8	**Annex A 1**
Product description Intended use	

TSD

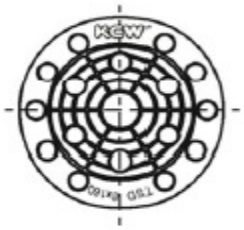

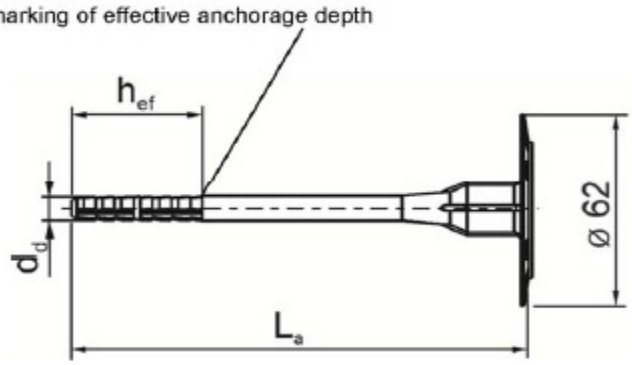

Marking

Company logo– (KEW)
Anchor type – (TSD)
diameter – (ø8)
Length of anchor – (e.g. 160)

Special nail with special head

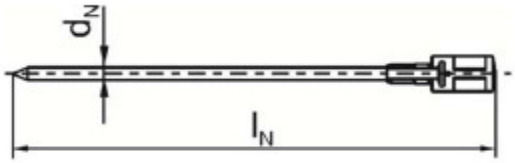

Table A1: Dimensions

Anchor type	Anchor sleeve				Special nail	
	L_a min [mm]	L_a max [mm]	d_d [mm]	h_{ef} [mm]	d_N [mm]	l_N [mm]
KEW - TSD	80	300	8	40	4,2	L_a + 4mm
Determination of max thinkness of insulation[mm]: $h_{D\,max} = L_a - h_{ef} - t_{tol}$						
e.g.: TSD 8x160	L_a= 160		h_{ef}= 40		t_{tol}= 0	
	thickness of insulation material $h_{D\,max}$ = 120					

Insulation support KEW TSD 8

Product description
Marking and dimensions of the anchor sleeve
expansion element / special nail

Annex A 2

Table A2: Materials

Name	Materials
Anchor sleeve	Polypropylen, colour: nature
Special nail	Steel, galvanized A2L or A2K according to EN ISO 4042:2001-01 $f_{yk} \geq 480$ N/mm²; $f_{uk} \geq 600$ N/mm²
	Stainless steel; mat.No. 1.4401 – 1.4571 according to EN ISO 3506:2010-04 $f_{yk} \geq 450$ N/mm²; $f_{uk} \geq 700$ N/mm²

Insulation support KEW TSD 8	**Annex A 3**
Product description Materials	

Table A3: Additional plates, diameter und materials

DSB 90

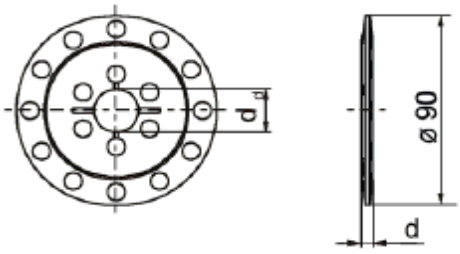

DSB 110

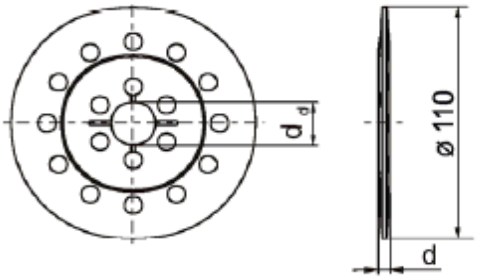

DSB 140

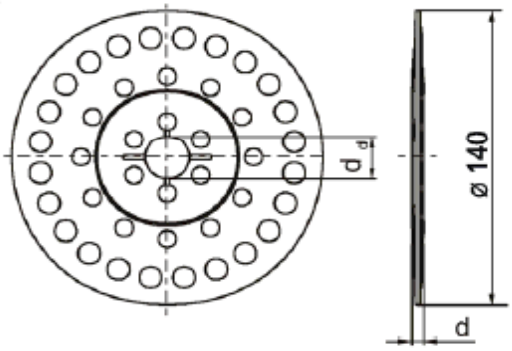

Insulation discs	Ø D [mm]	Ø d_d [mm]	d [mm]	Materials
DSB 90	90	20	5	PA 6, PP
DSB 110	110	20	5	PA 6, PP
DSB 140	140	20	5	PA 6, PP

Insulation support KEW TSD 8

Product description
Additional plates in combination with KEW - TSD

Annex A 4

Specifications of intended use

Anchorages subject to:

- The anchors may only be used for transmission of wind suction loads and shall not be used for the transmission of dead loads of the thermal insulation composite system.

Base materials:

- Normal weight concrete (use category A) according to Annex C1.
- Solid masonry (use category B), according to Annex C1.
- Hollow or perforated masonry (use category C), according to Annex C1.
- Lightweight aggregate concrete (use category D), according to Annex C1.
- For other base materials of the use categories A, B, C or D the characteristic resistance of the anchor may be determined by job site tests according to ETAG 014 Edition February 2011, Annex D.

Temperature Range:

- 0°C to +40°C (max. short term temperature +40°C and max. long term temperature +24°C)

Design:

- The anchorages are designed in accordance with the ETAG 014 Edition February 2011 under the responsibility of an engineer experienced in anchorages and masonry work.
- Verifiable calculation notes and drawings are prepared taking account of the loads to be anchored. The position of the anchor is indicated on the design drawings.
- Fasteners are only to be used for multiple fixings of thermal insulation composite systems.

Installation:

- Hole drilling by the drill modes according to Annex C1.
- Anchor installation carried out by appropriately qualified personnel and under the supervision of the person responsible for technical matters of the site.
- Installation temperature from 0°C to +40°C
- Exposure to UV due to solar radiation of the anchor not protected by rendering ≤ 6 weeks

Insulation support KEW TSD 8	**Annex B 1**
Intended Use Specifications	

Table B1: Installation parameters

Anchor type			KEW - TSD
Drill hole diameter	$d_0 =$	[mm]	8
Cutting diameter of drill bit	$d_{cut} \leq$	[mm]	8,45
Depth of drilled hole to deepest point	$h_1 \geq$	[mm]	50
Effective anchorage depth	$h_{ef} =$	[mm]	40

Table B2: Minimum distances and dimensions

			KEW - TSD
Thickness of member	$h \geq$	[mm]	100
Minimum allowable spacing	$s_{min} =$	[mm]	100
Minimum allowable edge distance	$c_{min} =$	[mm]	100

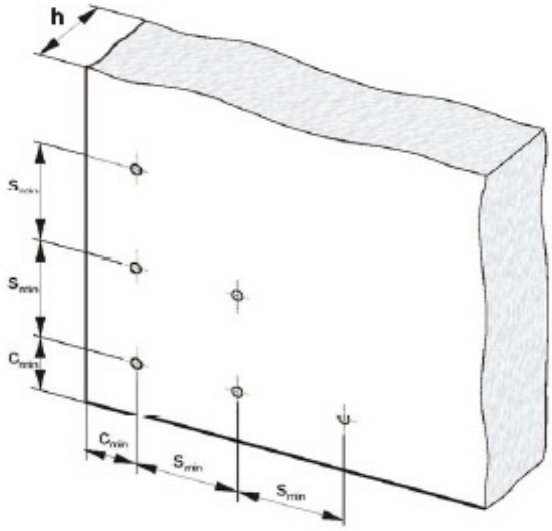

Insulation support KEW TSD 8	**Annex B 2**
Intended Use Installation parameters, Minimum distances and dimensions of members	

Installation instructions

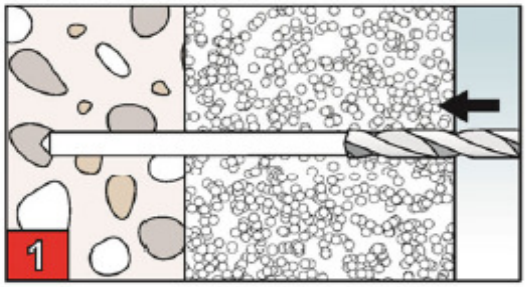

Create a hole about observation of the drill method according Annex C 1

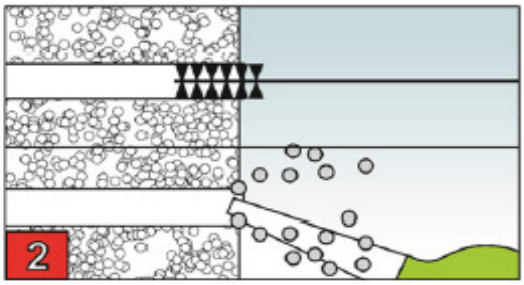

Holes to be cleaned of drilling dust.

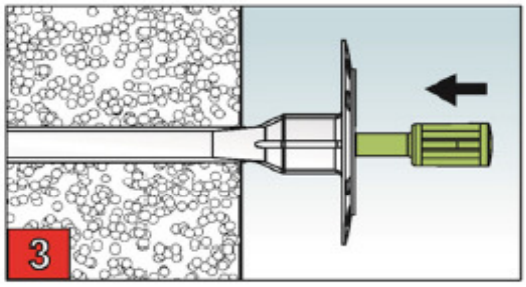

Insert the anchor into the hole until the plate rests on the insulation. hammer in the nail with a matching hammer

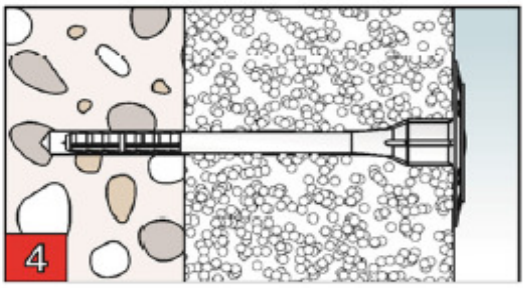

Mounted

Insulation support KEW TSD 8	**Annex B 3**
Intended Use Installation instructions	

Table C1: Characteristic resistance N_{Rk} in [kN] to tension loads for a single anchor

Base material	Bulk-density-class ρ [kg/dm³]	Minimum Com-pressive strength f_b [N/mm²]	Remarks	Drill method	N_{Rk} [kN]
Concrete C12/15			EN 206-1:2000	Hammer drilling	0,5
Concrete C16/20 - C50/60			EN 206-1:2000	Hammer drilling	0,75
Clay bricks, Mz e.g. according to DIN 105-100:2012-01 / EN 771-1:2011	≥1.8	20	Vertically perforation up to 15%	Hammer drilling	0,6
Sand-lime solid bricks (calcium silicate), KS e.g. according to DIN V 106:2005-10 / EN 771-2:2011	≥1.8	12	Vertically perforation up to 15%	Hammer drilling	0,8
Prefabricated reinforced components of lightweight aggregate concrete with open structure according to EN 1520:2011	≥0.9	4,0		Hammer drilling	0,4
Lightweight concrete solid blocks, V e.g. according to DIN V 18152-100: 2005-10 / EN 771-3:2011	≥0.9	4,0	Proportion of handle hole up to 10%, maximum extension of handle hole: length = 110mm; wide = 45mm	Rotary drilling	0,4
Vertical perforated sand-lime-bricks, KSL e.g. according to DIN V 106:2005-10/ EN 771-2:2011 outer web thickness ≥ 22 mm	≥1.4	12	Vertically perforation up to 15%	Rotary drilling	0,4
Vertically perforated clay bricks, HLz e.g. according to DIN 105-100:2012-01 / EN 771-1:2011 outer web thickness ≥ 11 mm	≥1.0	12	Vertically perforation more than 15% and less than 50%	Rotary drilling	0,4
Vertically perforated clay bricks, HLz 250mm x 380mm x 235mm outer web thickness ≥ 16 mm	≥0.8	6	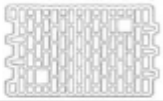	Rotary drilling	0,3

Insulation support KEW TSD 8

Performances
Characteristic tension resistance of the anchor

Annex C 1

Table C2: Point thermal transmittance according EOTA Technical Report TR 025:2007-06

Anchor type	insulation thickness h_D [mm]	point thermal transmittance χ [W/K]
KEW – TSD with specific nail, galvanized steel	40 - 260	0,002
KEW – TSD with specific nail, stainless steel	40 - 150	0,002
	150 - 260	0,001

Table C3: Plate stiffness according EOTA Technical Report TR 026:2007-06

Anchor type	diameter of the anchor plate [mm]	load resistance of the anchor plate [kN]	plate stiffness [kN/mm]
KEW – TSD	60	1,6	0,6

Insulation support KEW TSD 8	**Annex C 2**
Performances Point thermal transmittance Plate stiffness	

Table C4: Displacements

Base material	Bulk-density-class ρ [kg/dm³]	Minimum com-pressive strength f_b [N/mm²]	Tension load N [kN]	Displacements $\delta_m(N)$ [mm]
Concrete C12/15 EN 206-1:2000			0,16	0,3
Concrete C16/20 - C50/60 EN 206-1:2000			0,25	0,3
Clay bricks, Mz e.g. according to DIN 105-100:2012-01/ EN 771-1:2011	≥1.8	20	0,20	0,2
Sand-lime solid bricks (calcium silicate), KS e.g. according to DIN V 106:2005-10 / EN 771-2:2011	≥1.8	12	0,25	0,5
Prefabricated reinforced components of lightweight aggregate concrete according to DIN EN 1520:2011	≥0.9	4,0	0,13	0,4
Lightweight concrete solid blocks, V e.g. according to DIN V 18152-100:2005-10 / EN 771-3:2011	≥0.9	4,0	0,13	0,4
Vertically perforated sand-lime-bricks, KSL e.g. according to DIN V 106:2005-10/ EN 771-2:2011 outer web thickness ≥ 22 mm	≥1.4	12	0,13	0,13
Vertically perforated clay bricks e.g. according to DIN 105-100:2012-01/ EN 771-1:2011 outer web thickness ≥ 11 mm	≥1.0	12	0,13	0,11
Vertically perforated clay bricks, HLz 250mm x 380mm x 235mm outer web thickness ≥ 16 mm	≥0.8	6	0,10	0,06

Insulation support KEW TSD 8	**Annex C 3**
Performances Displacements	