# EKSPLOATACINIŲ SAVYBIŲ DEKLARACIJA

**DoP Nr. KEW -** 1109-BPR-2000 **- lt**

1. Unikalus gaminio tipo identifikacijos kodas: Plaktuku įmušami tvirtinimai TSD

2. Statybos produkto tipas, partija, serijos numeris ar kitoks jį identifikuojantis elementas pagal 11(4) str.:

   ETA-04/0030 A2 priedas
   Partijos numeris: žr. ant pakuotės

3. Statybų produkto paskirtis arba paskirtys pagal taikomas mastu suderinta technines specifikacijas, kaip tai yra numatyta gamintojo:

| | |
|---|---|
| bendrasis tipas | Įkaltas plastikinis inkaras, skirtas išorinėms šilumos izoliacijos kompozitinėms |
| skirtas naudoti | ETA-04/0030 B1 priedas |
| variantas / kategorija | ETA-04/0030 B1 priedas |
| sudėjimas | ETA-04/0030 B1 priedas |
| medžiaga | ETA-04/0030 A4 priedas |
| temperatūrų diapazonas | ETA-04/0030 B1 priedas |

4. Gamintojo pavadinimas, registruotasis prekės ženklas arba registruotasis prekės ženklas ir kontaktinis adresas pagal 11(5) str.:

   KEW Kunststofferzeugnisse GmbH Wilthen
   Dresdener Straße 19
   02681 Wilthen
   Vokietija

5. Įgaliotojo atstovo, kurio turimas įgaliojimas apima tikslus, išvardintus 12(2) sk., vardas, pavardė ir kontaktinis adresas (jei taikoma):

   --

6. Statybų gaminio eksploatacinių savybių pastovumo vertinimo ir patvirtinimo sistema (-os), kaip nurodyta V priede:

   2+ sistema

7. Jei statybos produktui, kuriam galioja suderintas standartas, yra išduota eksploatacinių savybių deklaracija:

   --

8. Jei statybos produktui, kuriam atliktas Europos techninis įvertinimas, yra išduota eksploatacinių savybių deklaracija:

yra išduota: DIBt Deutsches Institut für Bautechnik

kokiu pagrindu: ETA-04/0030 uz 11.09.2014

Notifikuotoji įstaiga: ETAG 014, 2011 m. vasario mėn. Redakc

1109-BPR veikta 2+ sistema

i) pradinis gamyklos patikrinimas ir gamyklos produkcijos kontrolė
ii) nuolatinis gamyklos gamybos kontrolės stebėjimas, vertinimas ir patvirtinimas.

ir rodoma: 1109-BPR-2000

9. Deklaruotos eksploatacinės savybės:

| Esminės charakteristikos | Dizaino metodas | Veikimas | | Suderintos techninės specifikacijos |
|---|---|---|---|---|
| | | Elektriniu būdu galvanizuotas plienas | nerūdijantis plienas | |
| Būdingoji varža | ETAG 014 | ETA-04/0030 C1 priedas | ETA-04/0030 C1 priedas | ETAG 014 |
| Minimalus atstumas nuo krašto ir inkarų tvirtinimo tarpai | ETAG 014 | ETA-04/0030 B2 priedas | ETA-04/0030 B2 priedas | |
| Poslinkis | ETAG 014 | ETA-04/0030 C3 priedas | ETA-04/0030 C3 priedas | |
| Taškinis šilumos pralaidumas pagal | ETAG 014 | ETA-04/0030 C2 priedas | ETA-04/0030 C2 priedas | |
| Plokštės kietumas pagal | ETAG 014 | ETA-04/0030 C2 priedas | ETA-04/0030 C2 priedas | |

Jei taikomos Specifinės techninės dokumentacijos 37 ar 38 str. nuostatos, kurių reikalavimus atitinka produktas:

--

10. Produkto eksploatacinės savybės, nurodytos 1 ir 2 punkte, atitinka nurodytąsias eksploatacines savybes 9 punkte.

Ši atitikties deklaracija išduota išimtinai 4 punkte nurodyto gamintojo atsakomybe.

Pasirašyta už gamintoją ir jo vardu:

**André Gedan**
(generalinis pardavimų ir rinkodaros direktorius)
**Wilthen, 11.09.2014**

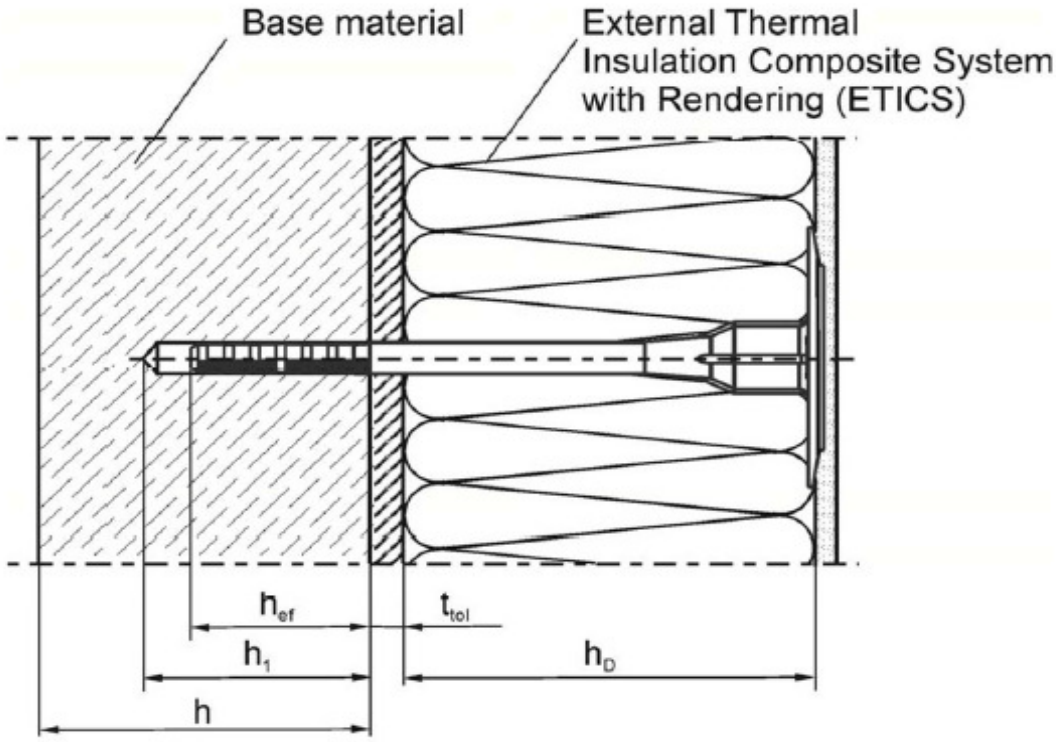


**Legend**

| | | |
|---|---|---|
| $h_D$ | = | thickness of insulation material |
| $h_{ef}$ | = | effective anchorage depth |
| h | = | thickness of member |
| $h_1$ | = | depth of drilled hole to deepest point |
| $t_{tol}$ | = | thickness of equalizing layer or non-load-bearing coating |

| | |
|---|---|
| **Insulation support KEW TSD 8** | **Annex A 1** |
| **Product description**<br>Intended use | |

**TSD**

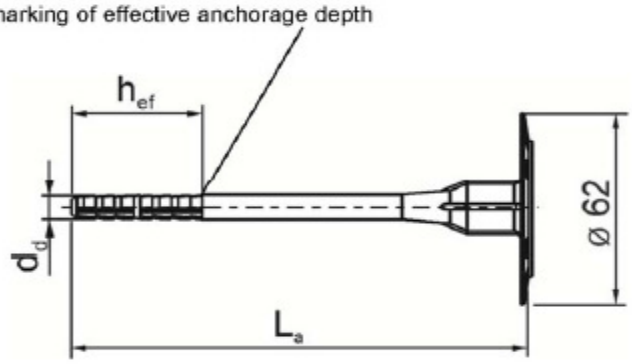


**Marking**

Company logo– (KEW)
Anchor type – (TSD)
diameter – (ø8)
Length of anchor – (e.g. 160)

**Special nail with special head**

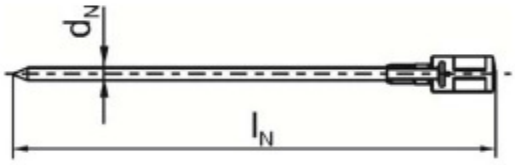


**Table A1: Dimensions**

| Anchor type | Anchor sleeve | | | | Special nail | |
|---|---|---|---|---|---|---|
| | $L_a$ min [mm] | $L_a$ max [mm] | $d_d$ [mm] | $h_{ef}$ [mm] | $d_N$ [mm] | $l_N$ [mm] |
| KEW - TSD | 80 | 300 | 8 | 40 | 4,2 | $L_a$ + 4mm |
| Determination of max thinkness of insulation[mm]: $h_{D\,max} = L_a - h_{ef} - t_{tol}$ | | | | | | |
| e.g.: TSD 8x160 | $L_a$= 160 | | $h_{ef}$= 40 | | $t_{tol}$= 0 | |
| | thickness of insulation material $h_{D\,max}$ = 120 | | | | | |

**Insulation support KEW TSD 8**

**Product description**
Marking and dimensions of the anchor sleeve
expansion element / special nail

**Annex A 2**

**Table A2: Materials**

| Name | Materials |
|---|---|
| Anchor sleeve | Polypropylen, colour: nature |
| Special nail | Steel, galvanized A2L or A2K according to EN ISO 4042:2001-01<br>$f_{yk} \geq 480$ N/mm²; $f_{uk} \geq 600$ N/mm² |
| | Stainless steel; mat.No. 1.4401 – 1.4571 according to EN ISO 3506:2010-04<br>$f_{yk} \geq 450$ N/mm²; $f_{uk} \geq 700$ N/mm² |

| | |
|---|---|
| **Insulation support KEW TSD 8** | **Annex A 3** |
| **Product description**<br>Materials | |

**Table A3: Additional plates, diameter und materials**

DSB 90

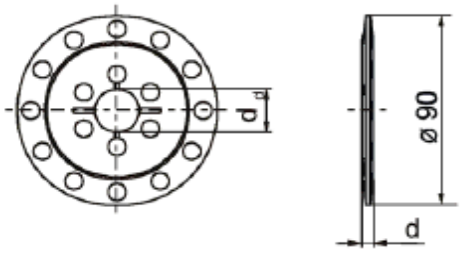


DSB 110

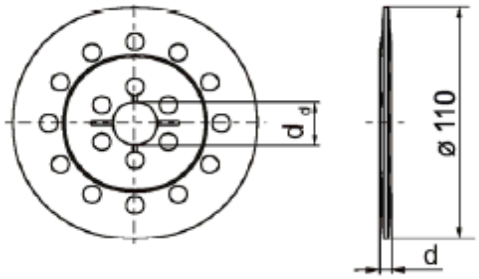


DSB 140

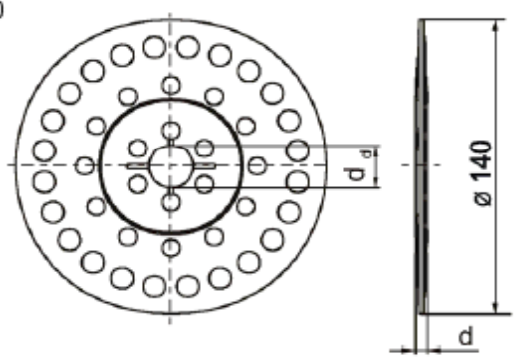


| Insulation discs | Ø D [mm] | Ø $d_d$ [mm] | d [mm] | Materials |
|---|---|---|---|---|
| DSB 90 | 90 | 20 | 5 | PA 6, PP |
| DSB 110 | 110 | 20 | 5 | PA 6, PP |
| DSB 140 | 140 | 20 | 5 | PA 6, PP |

**Insulation support KEW TSD 8**

**Product description**
Additional plates in combination with KEW - TSD

**Annex A 4**

## Specifications of intended use

**Anchorages subject to:**

- The anchors may only be used for transmission of wind suction loads and shall not be used for the transmission of dead loads of the thermal insulation composite system.

**Base materials:**

- Normal weight concrete (use category A) according to Annex C1.
- Solid masonry (use category B), according to Annex C1.
- Hollow or perforated masonry (use category C), according to Annex C1.
- Lightweight aggregate concrete (use category D), according to Annex C1.
- For other base materials of the use categories A, B, C or D the characteristic resistance of the anchor may be determined by job site tests according to ETAG 014 Edition February 2011, Annex D.

**Temperature Range:**

- 0°C to +40°C (max. short term temperature +40°C and max. long term temperature +24°C)

**Design:**

- The anchorages are designed in accordance with the ETAG 014 Edition February 2011 under the responsibility of an engineer experienced in anchorages and masonry work.
- Verifiable calculation notes and drawings are prepared taking account of the loads to be anchored. The position of the anchor is indicated on the design drawings.
- Fasteners are only to be used for multiple fixings of thermal insulation composite systems.

**Installation:**

- Hole drilling by the drill modes according to Annex C1.
- Anchor installation carried out by appropriately qualified personnel and under the supervision of the person responsible for technical matters of the site.
- Installation temperature from 0°C to +40°C
- Exposure to UV due to solar radiation of the anchor not protected by rendering ≤ 6 weeks

| | |
|---|---|
| **Insulation support KEW TSD 8** | **Annex B 1** |
| **Intended Use**<br>Specifications | |

**Table B1: Installation parameters**

| Anchor type | | | KEW - TSD |
|---|---|---|---|
| Drill hole diameter | $d_0 =$ | [mm] | 8 |
| Cutting diameter of drill bit | $d_{cut} \leq$ | [mm] | 8,45 |
| Depth of drilled hole to deepest point | $h_1 \geq$ | [mm] | 50 |
| Effective anchorage depth | $h_{ef} =$ | [mm] | 40 |

**Table B2: Minimum distances and dimensions**

| | | | KEW - TSD |
|---|---|---|---|
| Thickness of member | $h \geq$ | [mm] | 100 |
| Minimum allowable spacing | $s_{min} =$ | [mm] | 100 |
| Minimum allowable edge distance | $c_{min} =$ | [mm] | 100 |

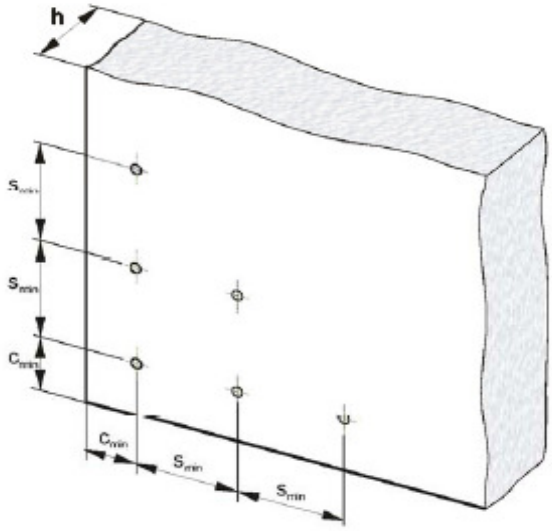


| | |
|---|---|
| **Insulation support KEW TSD 8** | **Annex B 2** |
| **Intended Use**<br>Installation parameters,<br>Minimum distances and dimensions of members | |

**Installation instructions**

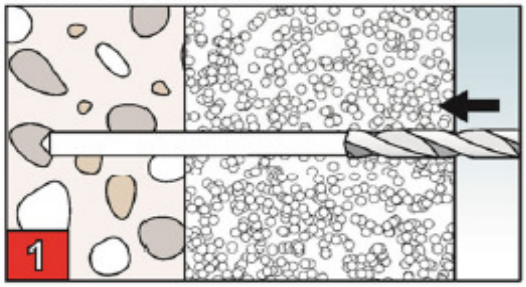


Create a hole about observation of the drill method according Annex C 1

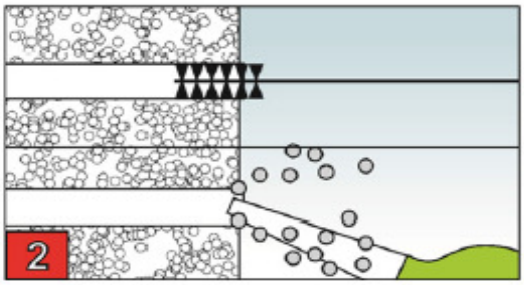


Holes to be cleaned of drilling dust.

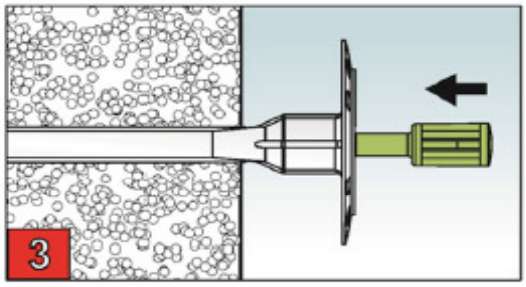


Insert the anchor into the hole until the plate rests on the insulation. hammer in the nail with a matching hammer

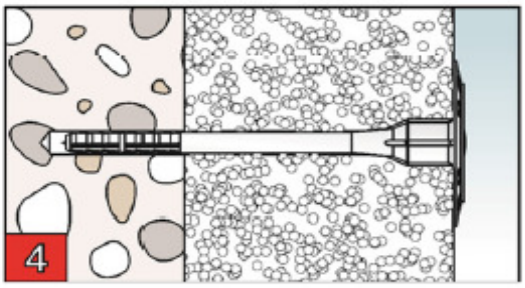


Mounted

| | |
|---|---|
| **Insulation support KEW TSD 8** | **Annex B 3** |
| **Intended Use**<br>Installation instructions | |

**Table C1: Characteristic resistance $N_{Rk}$ in [kN] to tension loads for a single anchor**

| Base material | Bulk-density-class ρ [kg/dm³] | Minimum Com-pressive strength $f_b$ [N/mm²] | Remarks | Drill method | $N_{Rk}$ [kN] |
|---|---|---|---|---|---|
| Concrete C12/15 | | | EN 206-1:2000 | Hammer drilling | 0,5 |
| Concrete C16/20 - C50/60 | | | EN 206-1:2000 | Hammer drilling | 0,75 |
| Clay bricks, Mz e.g. according to DIN 105-100:2012-01 / EN 771-1:2011 | ≥1.8 | 20 | Vertically perforation up to 15% | Hammer drilling | 0,6 |
| Sand-lime solid bricks (calcium silicate), KS e.g. according to DIN V 106:2005-10 / EN 771-2:2011 | ≥1.8 | 12 | Vertically perforation up to 15% | Hammer drilling | 0,8 |
| Prefabricated reinforced components of lightweight aggregate concrete with open structure according to EN 1520:2011 | ≥0.9 | 4,0 | | Hammer drilling | 0,4 |
| Lightweight concrete solid blocks, V e.g. according to DIN V 18152-100: 2005-10 / EN 771-3:2011 | ≥0.9 | 4,0 | Proportion of handle hole up to 10%, maximum extension of handle hole: length = 110mm; wide = 45mm | Rotary drilling | 0,4 |
| Vertical perforated sand-lime-bricks, KSL e.g. according to DIN V 106:2005-10/ EN 771-2:2011 outer web thickness ≥ 22 mm | ≥1.4 | 12 | Vertically perforation up to 15% | Rotary drilling | 0,4 |
| Vertically perforated clay bricks, HLz e.g. according to DIN 105-100:2012-01 / EN 771-1:2011 outer web thickness ≥ 11 mm | ≥1.0 | 12 | Vertically perforation more than 15% and less than 50% | Rotary drilling | 0,4 |
| Vertically perforated clay bricks, HLz 250mm x 380mm x 235mm outer web thickness ≥ 16 mm | ≥0.8 | 6 | 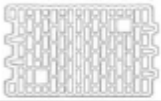 | Rotary drilling | 0,3 |

**Insulation support KEW TSD 8**

**Performances**
Characteristic tension resistance of the anchor

**Annex C 1**

**Table C2: Point thermal transmittance according EOTA Technical Report TR 025:2007-06**

| Anchor type | insulation thickness $h_D$ [mm] | point thermal transmittance $\chi$ [W/K] |
|---|---|---|
| KEW – TSD with specific nail, galvanized steel | 40 - 260 | 0,002 |
| KEW – TSD with specific nail, stainless steel | 40 - 150 | 0,002 |
| | 150 - 260 | 0,001 |

**Table C3: Plate stiffness according EOTA Technical Report TR 026:2007-06**

| Anchor type | diameter of the anchor plate [mm] | load resistance of the anchor plate [kN] | plate stiffness [kN/mm] |
|---|---|---|---|
| KEW – TSD | 60 | 1,6 | 0,6 |

| | |
|---|---|
| **Insulation support KEW TSD 8** | **Annex C 2** |
| **Performances**<br>Point thermal transmittance<br>Plate stiffness | |

**Table C4: Displacements**

| Base material | Bulk-density-class<br>$\rho$<br>[kg/dm³] | Minimum com-pressive strength<br>$f_b$<br>[N/mm²] | Tension load<br>N<br>[kN] | Displacements<br>$\delta_m(N)$<br>[mm] |
|---|---|---|---|---|
| Concrete C12/15<br>EN 206-1:2000 | | | 0,16 | 0,3 |
| Concrete C16/20 - C50/60<br>EN 206-1:2000 | | | 0,25 | 0,3 |
| Clay bricks, Mz<br>e.g. according to DIN 105-100:2012-01/<br>EN 771-1:2011 | ≥1.8 | 20 | 0,20 | 0,2 |
| Sand-lime solid bricks (calcium silicate), KS<br>e.g. according to<br>DIN V 106:2005-10 / EN 771-2:2011 | ≥1.8 | 12 | 0,25 | 0,5 |
| Prefabricated reinforced components of lightweight aggregate concrete according to DIN EN 1520:2011 | ≥0.9 | 4,0 | 0,13 | 0,4 |
| Lightweight concrete solid blocks, V<br>e.g. according to<br>DIN V 18152-100:2005-10 / EN 771-3:2011 | ≥0.9 | 4,0 | 0,13 | 0,4 |
| Vertically perforated sand-lime-bricks, KSL<br>e.g. according to DIN V 106:2005-10/<br>EN 771-2:2011<br>outer web thickness ≥ 22 mm | ≥1.4 | 12 | 0,13 | 0,13 |
| Vertically perforated clay bricks e.g. according to DIN 105-100:2012-01/<br>EN 771-1:2011<br>outer web thickness ≥ 11 mm | ≥1.0 | 12 | 0,13 | 0,11 |
| Vertically perforated clay bricks, HLz<br>250mm x 380mm x 235mm<br>outer web thickness ≥ 16 mm | ≥0.8 | 6 | 0,10 | 0,06 |

| | |
|---|---|
| **Insulation support KEW TSD 8** | **Annex C 3** |
| **Performances**<br>Displacements | |